An Electronic Shelf Label System Based on WSN

Zhou Chunhui[1,a], Mei Pan[2,b], Huang Liwen[1,c], Liu Kezhong[1,d], Wen Yuanqiao[1,e]

[1]School of Navigation, Wuhan University of Technology, Wuhan, China

[2]School of Information Engineering, Wuhan University of Technology, Wuhan, China

[a]church_zhou@whut.edu.cn, [b]442722968@qq.com, [c]lwhuang@whut.edu.cn, [d]kzliu@whut.edu.cn, [e]wenyuanqiao@yahoo.com.cn

Key words: ESL; wireless communication base station; low-power; WSN; Ad Hoc

Abstract: Traditional paper labels on the supermarkets' shelves are of many shortcomings such as the high error rate, high losing rate, increasing cost and unrealizable realtime-updating caused by manual management. In order to overcome these shortcomings, this paper aims to design a new Electronic Shelf Label system. Firstly, the overall framework is introduced. Then an ultra-low-power ESL and wireless communication base station modules are studied respectively. The MAC and router protocols are also designed based on Wireless Sensor Network (WSN) to meet the requirement of low power consumption and real-time price update. The Electronic Shelf Label system can improve the efficiency of the label management greatly and enhance customers' experiences thus has a wide prospect of application.

Introduction

Electronic Shelf Label system (ESLs) is a typical commercial application of the Internet of Things which is already in hot spot for many years. It can overcome many of the shortcomings of the traditional paper label fundamentally, such as the high error rate, high losing rate, increasing cost and non-realtime update caused by manual management. ESLs offers a set of solutions, which almost can be considered as one-time investment but long-term benefit application of Internet of Things. This application can save the management cost and enhance the image of the stores. ESL has been put into practical use in some supermarkets, mainly in western developed countries, Australia, Turkey in Middle East, Japan and Korean in Asia. In China, ESLs market is gradually started up, and some relevant manufactures conduct products trials and generalizations. The key technologies in ESLs are low power consumption, low cost and good visual effect.

This paper designs an ESLs. For these key technologies, Using a top-down design method, the implementation scheme and framework of the system are studied, including label management software, control platform, wireless communication base station and ESL. In this system, ultra-low-power CPU and wireless communications solutions are used to meet the requirement of low power and low cost. ESLs can be widely used in shopping malls, supermarkets and convenience stores, thus has a wide prospect in supermarket application.

Overall Design

ESLs consists of four parts. They are label management software, control platform, wireless communication base station and ESL. The label management software is responsible for system configuration, label properties configuration, database update and so on; the control platform is in charge of building & maintaining the network, and it also control the data communication between the computer and labels; the wireless communication base station is responsible for stable and reliable data transmitting with a certain long distance; the ESL functions as a terminal display device. The network architecture of the ESLs is based on WSN and Ad Hoc. In this paper, the control platform is named as Sink, the wireless communication station is named as Router, the ESL is named as Label.

The Working Principle of The ESLs. While ESLs is working, the label management software processes and packs the data of product information into packets. Then the packets will be sent to

Sink through the serial port. After Sink receives the packets, these data will be analyzed and transmitted to Router through the wireless communication network (single or multi-hop) built before. Finally Router will transmit the analyzed packets to a certain Label, and the Label can act following the instruction given in the packets.

The wireless communication network is a self-organized network, integrated WSN and Ad Hoc. Router functions as a relay station between Sink and Label. In this design, mostly a Router can connect and manage 256 Labels (configurable), and the link between Sink and Label can be single or multi-hop, relayed by Router. Furthermore, a new Label can be added in at any time and there is no need to change the network architecture. Considering the security of the network, the Label would never be accepted until the specific access mode is used. The data should be encrypted before transmitting in order to prevent malicious attacks.

The Architecture of The ESLs. Compared the functional requirements of ESLs with the characteristics of the Ad Hoc and WSN, we can design a specific network adapted to the ESLs. As well as WSN, ESLs has a large network scale, consists of thousands of nodes in a limited, concentrated area. Therefore the stability of the data transmission is a critical issue for this large-scale network. The clustering and hierarchical structure model significantly optimizes the topology of the network, which contribute to the route selection, data fusion and energy saving. The Architecture of the ESLs is showed in Fig. 1.

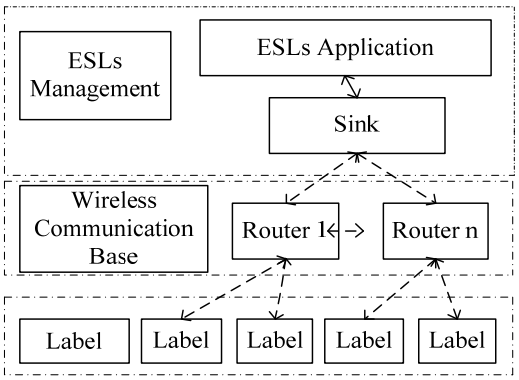

Fig. 1 The architecture of the ESLs

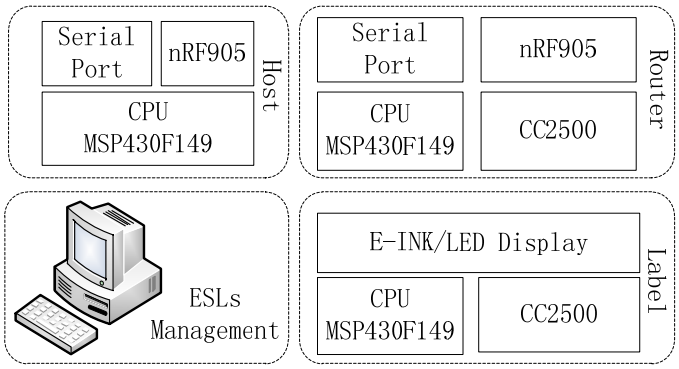

Fig. 2 The hardware structure of the ESLs

The Detailed Design and Test Results

Hardware Design. The hardware design of ESLs includes the circuit design of Sink, Router and Label. According to the functional requirement of ESLs, MSP430F149 is chosen to be the main control chip. The communication between Router and Label is performed by the CC2500 module. The nRF905 module is in charge of the communication between Sink and Router. The communication distance of CC2500 is 10~30 meters with a PCB antenna, while nRF905 is up to 300 meters with a SMA omnidirectional antenna. Either the E-ink display or the bistable LED display can act as the display module in ESLs. Both of them can keep displaying when power failure occurs. The structure of the hardware is shown in Fig. 2.

Software Design. The software of ESLs can be divided to 3 parts: an application module, a communication module and a display module. The application module contains database, and manages the information of goods and the users, and control the labels. The structure of the application module is presented in Fig. 3.

The communication module contains the network, and provides communication links for the label controlling. The structure of the self-organized network is shown in Fig. 4. The display module is distributed in this network and displays the goods information.

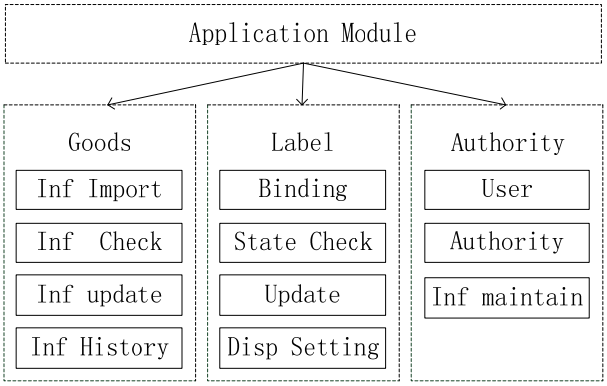

Fig. 3 The structure of the application module

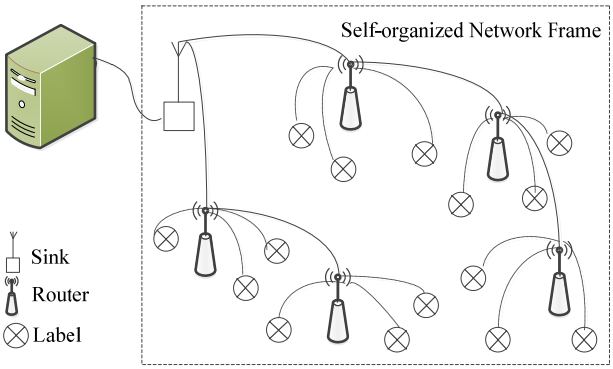

Fig. 4 The structure of the network

A key problem needed to be solved in communication module is the protocols of the MAC and router protocol. The MAC protocol is similar to Mediation Device (MD) protocol. Router functions as a MD, and each label is a node in the network. But the labels does not need to communicate with each other. So the MAC protocol of ESLs is in Fig. 5.

The router protocol of ESLs is designed hierarchically, based on LEACH and LANMAR. The router is a cluster node, similar to LEACH. But router in ESLs is stable, similar to LANMAR. The topology of the network of ESLs will be relatively stable after built. The maintenance of the ESLs network is implemented by a heartbeat synchronization mechanism. The routing diagram of ESLs is shown in Fig. 6.

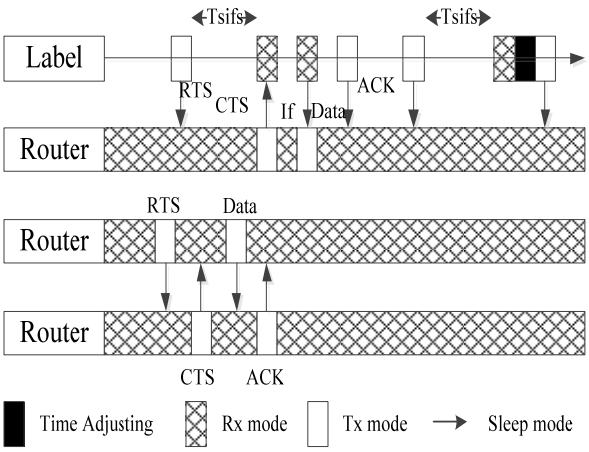

Fig. 5 MAC protocol of ESLs

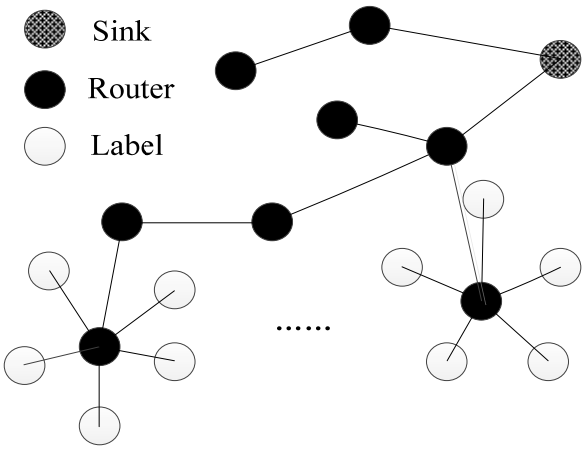

Fig. 6 Routing diagram of ESLs

Test Result of The ESLs. Firstly, the current consumption of the Label is tested. When the data rate of CC2500 is 10kbps, the typical current consumption situations are listed as follows: 400nA in power-down mode, 1.5mA in idle state, 17.3mA in receive mode at limited sensitivity, and 15.1mA in transmit mode with -12dBm output power. The current consumption of micro-controller chip MSP430F149 is 400uA in active state (only last a few milliseconds), and low to 50uA in LPM0 state. If E-ink or bistable LED display module is used, most of the time the Label will be in the power-down state. With 2 high-quality button batteries, normally it is entirely feasible to work for 3 to 5 years.

Both CC2500 and nRF905 can be configured by controlling their output power, receiving sensitivity and data rate, then their communication distances can be reduced to 3 meters and 10 meters. Therefore it is convenient to simulate the process of network. Through the output from the serial port of Sink, we can know how it works. Furthermore, through the serial port the Sink can test to communicate with a certain Label.

Summary

This paper designs a ESLs based on WSN, including the network topology, the MAC protocol and router protocol. A simple experimental model is developed with these protocols. The results

show that the wireless communication of ESLs designed in this paper works stably and safely, and the software has implemented the basic functions including the goods management and the label management and works well. With the increasing information technology in the supermarket and stores, ESLs will have more extensive applications and promising prospects.

Acknowledgements

This work was supported by the National Natural Science Foundation of China under Grant No. 51279151; the Science and Technology Project of Transportation Bureau of Zhejiang Province under Grant No. 2011W04; the Postdoctoral Special Funds of China under Grant No. 201003502; the Ocean Science and Technology Project Of Tianjin under Grant No. KX2010-0002. It was also supported by the Fundamental Research Funds for the Central Universities of WHUT.

References

[1] Zhang Fan, Zhang Hai-peng, Design of an Electronic Shelf Label System[J], Telecommunication Engineering. 2010(12): 95-100.

[2] Li Qun, Song Xing, Review of Low-duty Cycle MAC Protocol for Wireless Sensor Networks[J], Microcontroller & Embedded Systems. 2008(7):12-14.

[3] Peng Wei, Sun Lei, Review of Security Techniques for Mobile Ad Hoc Networks[J], Computer Science. 2009(7):1-7

[4] Chiu-Kuo Liang, His-Shu Wang, An Ad Hoc On-Demand Routing Protocol with High Packet Delivery Fraction[C]. IEEE International Conference on Mobile Ad-hoc and Sensor Systems, 2004, p594

[5] Chen Lin-xing, Zeng Xi,Cao Yi, Mobile Ad Hoc Networks[M], Electronic Industry Press, BEIJING, 2012.