ATLANTIS PRESS
Advances in Computer Science Research, volume 87
3rd International Conference on Mechatronics Engineering and Information Technology (ICMEIT 2019)

A320 Flight Simulator Motion System Maintenance and Fault Diagnosis

Lei An [a], Guozhu Zhao [b]
Civil Aviation Flight University of China, Guanghan 618300, China.
[a]anlei7@sina.com, [b]jude.1909@163.com

Abstract. The from the angle of defenders of details needed to maintain the six degree of freedom motion system of a simulator of the system of institutions, driving mode and working principle of the system and other aspects of the theory of knowledge, and combine the data and maintenance practices, maintenance simulation machine, some theoretical and technical problems is proposed, and the methods to solve these problems. The Newton Euler method mechanism dynamics analysis, and study mechanism of motion and force of the mathematical model based on, and Simulation of the motion system of a machine learning and maintenance to provide a reliable theoretical basis. At last, combining with the motion of the system structure principle, characteristics and fault occurrence, using fault tree and refer to the troubleshooting process, and analyzes the common faults and causes, and gives the corresponding solutions and shows, and for the maintenance of flight simulator motion system provided for reliable reference.

Keywords: A320 Flight Simulator, fault diagnosis, six degrees of freedom motion system, structure mathematical model, fault analysis.

1. Introduction

The flight simulator is a possible reappears the real or simulated aircraft feeling of driving system, driven by hydraulic or electric motor, and by the most advanced computer technology controlled by the same proportion simulated cockpit and give the driver provide similar load manipulation, visual, auditory, motor and sensory testing and training equipment. The simulator is composed of five parts, which are simulated cockpit, motion system, visual system, computer system and teacher console. Its essence is by digital computer real-time control and six degree of freedom simulation equipment to provide instantaneous overload pitch, yaw, lifting, longitudinal and lateral translation. Therefore, the advantages and disadvantages of the sports system and the maintenance and fault diagnosis will be directly related to the flight simulation training fidelity, safety and economy [1].

The from the angle of defenders of details needed to maintain the six degree of freedom motion system of a simulator of the system of institutions, driving mode and working principle of the system and other aspects of the theory of knowledge, and combine the data and maintenance practices, maintenance simulation machine, some theoretical and technical problems is proposed, and the methods to solve these problems [2].

The Newton Euler method mechanism dynamics analysis, and study mechanism of motion and force of the mathematical model based on, and Simulation of the motion system of a machine learning and maintenance to provide a reliable theoretical basis. At last, combining with the motion of the system structure principle, characteristics and fault occurrence, using fault tree and refer to the troubleshooting process, and analyzes the common faults and causes, and gives the corresponding solutions and shows, and for the maintenance of flight simulator motion system provided for reliable reference [3].

2. Research Significance

Fault phenomenon: the balancing wheel makes a loud noise (mechanical friction sound), cannot be balanced by electric power, and can be balanced manually. In this paper, the research for the improvement of China's civil aviation college of flight simulator training center, maintenance, operation efficiency, and save the maintenance cost plays an important role, and lay the foundations for the subsequent series of the maintenance of the simulator.

The computer system is mainly responsible for the calculation of flight simulation and the exchange of data with the interface system. The complex computing and graphic display which needed expensive computer workstations to be accomplished by expensive computer workstations. Now it only needs to buy ordinary personal computers to complete the distributed multi computer network with multiple computers in a single cabinet or multi cabinet. The simulator system is becoming the mainstream [4]. In this system, different computers are responsible for different tasks through data exchange and synchronization.

The visual system is responsible for the simulation of visual images, which provides virtual external world for pilots. The image generation system is responsible for real-time 3D image generation, and the projection system is responsible for projecting real-time 3D images onto the 180-degree ring surface screen. The progress of the visual system mainly includes the progress in these three aspects. The widely used "three gun" kinescope projection system has gradually been replaced by silicon-based LCD projector [5].

The new LCOS projector has great progress in these three aspects, such as the DLA-HD10K projector of JVC company used by RSI company's visual system, which uses non-mobile mirror technology, with color stability, high resolution, resolution up to 1920 x 1080, contrast to 2500:1, with cinema level color grade and black. The color gamut shows the effect. This type of projector has finally replaced the "three gun" projection system, which has been widely used in the high-end flight simulator. Pilots fly to all parts of the world, and the terrain and geomorphology they see are close to the virtual environment brought by the simulator. The effect of simulated flight training is largely influenced by the quality of the visual image, and the quality of the visual image depends on the completion of the debugging work. At the same time, the image debugging work is big, the requirement is high, and it has certain risk. Therefore, in the process of debugging, we should be careful and patient, and use all kinds of debugging techniques and means reasonably to get the best effect [6].

The sports system provides pilots with other kinds of flight sensation such as jolting in flight. In the motion system, the electric motion system begins to replace the hydraulic motion system gradually. Compared with the hydraulic motion system, the system has the advantages of saving electricity, low noise, no pipe pollution and no oil leakage. However, the electric motion system is still a new thing, and its technology is not very mature, in which the supply of parts is a problem. The problem of traditional hydraulic systems is basically not [3].

3. Fault Analysis

The motion system is mainly composed of control cabinet (DN1), motion platform, hydraulic actuator cylinder and hydraulic source (HPU). The flight training cockpit is placed on a sports platform supported by six hydraulic actuators, which are divided into three groups, one in two, and powered by hydraulic oil provided by the HPU. Different combinations of the length and speed of the actuator tube are used to create a dynamic flight.

To be on the safe side, sports system has a perfect safety control in detecting circuit: every manual valve position sensor, each actuator cylinder displacement and pressure sensor, and another three-sports emergency shut off (Emergence shutdown) switch, DN1, above the cockpit and HPU respectively, the dozens of sensors and switches, are in series, any one to detect anomalies will shut off the movement system. For example, the following failures 1 and 2 show that the hydraulic motor is working normally on the DN1.The boarding bridge is closed, the motion system light is on, start the motion system, the motion system rises to the working height, and the DN1 displays the normal hydraulic pressure. Cockpit slide according to the normal procedure, take off, when the plane elevation of more than 30°, sudden unloading system movement, movement platform quickly back to the stop bit. Only the fault phenomenon is different:

Failure 1: DN1 shows: Emergence shutdown. The working current is normal, and the DN1 is still in the working state. Failure 2: the DN1 operating current suddenly increases, and then it immediately shuts down and is in Emergence shutdown state.

The motion control computer is the core of the operation system of the simulator. The motion control computer is the core of the operation system. The main working mode of the motion system is through the high-speed network card, the motion control computer receives the platform pose control command from the simulator main control computer, coordinates and commands the control platform of the basic level control system, and realizes the motion of the system of six degrees of freedom. The following three faults are mainly the problems of the working system between the simulator main control computer and the motion control computer and the motion platform. The fault phenomena are as follows:

Failure 3: the moving system does not respond to host commands. Failure 4: command system to stop after scheduled emergency. Failure 5: no command movement or vibration is given by the system during operation.

When the above failure occurs, it will affect the normal flight training and lose control of the simulator, if not dealt with in time, it will lead to serious economic losses and accidents. Abnormal operation of hydraulic source (HPU) 3. Abnormal output signal and working current of control cabinet (DN1) 4. The simulator motion system a wire short circuit 2. Actuator tube displacement and pressure sensor and control box fault 3.

The system is in manual mode; the data transmitted by the host machine is not correct; the control computer crashes; the cable is out of order; the Ethernet network card is out of order; the control computer is out of order. One or more setting values of the generator window are out of the system performance range. 3.Position or pressure sensor fault 2. Analog input card fault 3. Analog output card fault 4. Power supply fault 5. Servo valve fault 6. Cable fault.

4. Remove Steps

Failure 1: first, the maintenance staff raises the moving platform to the working height, and raises the six actuators one by one to the extreme limit, and the work is normal. Then detect roll pitch to the limit, can appear only when the elevation of more than 30° Emergence shutdown. The displacement and pressure sensors and control boxes of the six actuator cylinders were detected to be normal, and the HPU was always in normal working state. The monitoring DN1 output signal and working current are normal. If no fault is found, further inspection of the cockpit equipment position sensor shows that the sensor is loose due to long-term shaking. The sensor mounted longitudinally in a sleeve, when the platform elevation of more than 30°, it because of its own gravity, sliding backwards 5 mm, circuit connected to the output of a system emergency shut off signal to DN1 ark to emergency pressure relief, after fastening, the sensor fault phenomenon disappears, troubleshooting.

Failure 2: since there is no fault information prompt after the power failure of DN1, the fault is first analyzed. Before the power failure of DN1, the current suddenly increases, which may be caused by a short circuit in a certain circuit. Again, because the motion platform to work height, six actuation tube one by one to limit, are working properly, then detect roll, pitch to limit position, at the same time monitoring DN1 ark working current, only in the elevation of more than 30 °, the current increases suddenly, DN1 shut off. The displacement and pressure sensors and control boxes of the six actuator cylinders were tested to be working normally, and the HPU was always in normal working state. Check the cabin emergency shut-off switch and equipment position switch, sensor are intact. If failure has not occurred, checked DN1 current with the ammeter, found that when the platform elevation of more than 30°, the total current is increased suddenly, from the actuator cylinder moving along a line of six cylinder one by one check, found that one of the actuating cylinder current abnormal, finally found a line of the actuating cylinder wear for a long time, due to frequent takeoff to reveal about 2 mm wire and when the platform elevation of more than 30°, contact wire and metal frame, and short circuit, leading to failure, so the wires which exposed to bandage after processing, troubleshooting.

Failure 3: first check the operating mode of the system. If the system is in manual mode, switch to normal mode. If the failure continues, use the host interface document to configure the host to transmit the correct data. If the fault continues, restart the system, switch all devices to OFF, and wait a few

seconds before switching ON. If the fault continues, check that the wire is disconnected, check that the cable terminates correctly, check that the transmission cable from the control computer is connected to the host computer, and vice versa. Finally, check whether the wire connector is clean and contaminated. If the failure continues, check the Ethernet card and replace it if necessary. If the failure continues, check the control computer and replace it if necessary.

Failure 4: first return the command system to the neutral state, and then select the correct output mode (output mode) in the system window. If the failure continues, reduce the amplitude or frequency of the set value of the generator window. Note that in the output mode, the amplitude of channel 0 to 2 is in meters, and the amplitude of channel 3 to 5 is in degrees. All the amplitude units of the output mode on the actuator cylinder are meters. If the failure continues, check the control loop Settings in the control loop window. Check the sensor gain in the analog input window. Download the calibration data file and the initial Settings. If necessary, restore the SYSCAL.DAT file with a backup in the DATA directory.

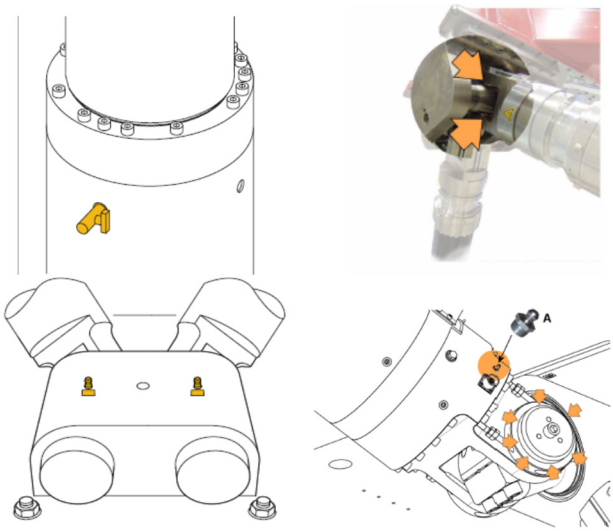

Fig. 1 the oil nipples of moog motion system

Failure 5: first of all, vibration is usually caused by a single actuator, but it causes the whole system to vibrate. To determine which actuator cylinder is causing the problem, open the control loop for each actuator cylinder, which means that the servo valve setting is a constant rather than a function of the actuator cylinder setting and feedback. Check whether the signal of the sensor is normal and replace it if necessary. If the failure continues, check for a signal spike during the detection of the sensor. If the signal from the sensor is regular and the A/D converted value peaks, the analog input card is faulty and should be replaced. If the fault continues, check the signal from the analog output card to the servo valve and replace the analog output card if necessary. If the fault continues, check the power supply output, and check the power supply at the sensor and servo valve joint. If the failure continues and the actuator is converted to "open circuit" with no effect on vibration, the problem may be the servo valve, analog output card or cable connected to the servo valve. Check cables, connectors and signals from analog output CARDS. Replace the servo valves one by one with spare servo valves if necessary. If the failure continues, check the connector and cable connections for damage.

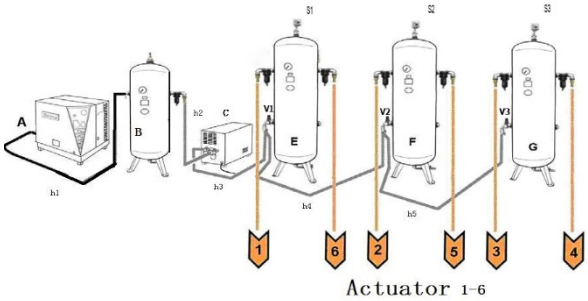

Fig. 2 the structure of actuator 1-6

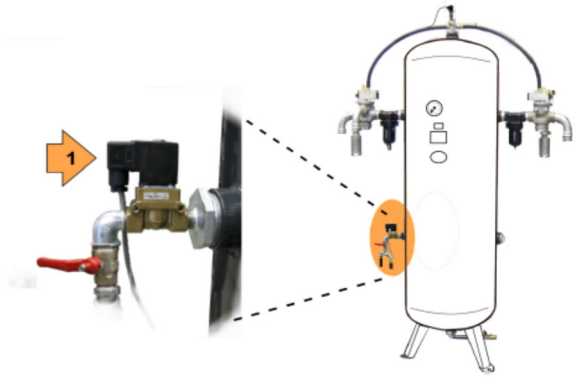

Fig. 3 the sensor of the MOOG motion system

5. Conclusion

The reset button cannot be reset, and the reloading model cannot troubleshoot. Turn on the cockpit power cabinet and find the auxiliary operator left amplifier error. The fault remains after the restart. After the amplifier is reset, the balance wheel will automatically hit the low limit card to die. Let the auxiliary amplifier not work. At the bottom of the simulator, the motor was found to be in the farthest position and could not be adjusted. Check the mechanical structure drawing remove the wheel balancing observation found that main shaft screw loose, tighten the screw, found that fastening balancing wheel can be normal, regardless of position or to be obtained power balancing, without noise, troubleshooting.

Acknowledgements

This work was financially supported by fund project of Civil Aviation Flight University of China (J2019-101) and (J2015-63). Helicopter multi mission flight training device development, civil aviation innovation and guidance fund projects major projects (MHRD20130108).

References

[1]. Research on a Case-Based Decision Support System for Aircraft Maintenance Review Board Report LNCS 4113, pp, Springer-Verlag Berlin Heidelberg, 2006:1030-1039.

[2]. Miehael MasuehM LaszloPolos. Knowledge representation and reasoning under uncertainty. New York: Springer- Verlsg,1999.276~288.

[3]. Watson I, Mariri F, Case-Based Reasoning: A Review, Knowledge Engineering Review,1994, (4): 327-54.

[4]. A.1.Meehitov and H. M. Moshkovieh. Knowledge Aequisition Tool for Case-Based Reasoning System. Expert System with Application, 1998, vol.8:201-212.

[5]. Chu Shu-chuan, Roddick J F, Tsong-Yi Chen, et al, Efficient Search Approaches for K-medoids-based Algorithms, TENCON '02, Proceedings, 2002 IEEE Region 10 Conference on Computers, Communications, Control and Power Engineering, 2002,1:712-715.

[6]. Aamodt, and Plaza. Case-based Reasoning: Foundational issues, methodological variations, and system approaches. AI Communications, 1997, vol.7:39-52.

[7]. Kyung shin, Ingoo Han. A Case-Based approach using inductive indexing for corporate bond rating. Deeision Support Systems, 2001.41-52.

[8]. Isermann. On the applicability of model-based fault detection for technical process. Control Engineering Practice,1999.439-450.

[9]. Hei-Chia Wang, Huei-Sen Wang, A hybrid expert system for equipment failure analysis, Expert System with Application, 2005(4):615-622.