Advances in Engineering Research, volume 182
VIII All-Russian Science and Technology Conference "Contemporary Issues of Geology, Geophysics and Geoecology of the North Caucasus" (CIGGG 2018)

Development of a New Type of Direct Current Generator of High Power on the Basis of Permanent Magnets

Daudov I.M.
Grozny State Petroleum Technical University n.a. M.D. Millionschikov
Grozny, Russia
Ibr024@mail.ru

Yusupov S.S.
Grozny State Petroleum Technical University n.a. M.D. Millionschikov
Grozny, Russia
Saidamin_62@mail.ru

Beriev I.P.
Grozny State Petroleum Technical University n.a. M.D. Millionschikov
Grozny, Russia

Bagatyrev T.S.
Grozny State Petroleum Technical University n.a. M.D. Millionschikov
Grozny, Russia

Dataev R.S.
Grozny State Petroleum Technical University n.a. M.D. Millionschikov
Grozny, Russia

***Abstract*—The article presents the development project of a device, namely a generator of innovative principle of generating electrical energy, in other words, the development project of an innovative source of electricity.**

Key words–generator; electricity source; direct current; electromagnetic induction; magnetic field; copper plate

I. Introduction

Nowadays electricity presents one of the foundations of modern civilization. It is impossible to imagine the life of cities and towns without electricity; as a consequence the whole world needs sources of electricity. Only electric current generators present the sources of electricity.

It is extremely important to create an energy generator that can actively produce energy and use it in a new generation of electronics suitable for carrying and self-service.

The main idea of this research is to create a high-density electric current generator, the principle of operation of which is the direct influence of the magnetic field of permanent magnets on free electrons in a copper plate by means of Lorentz forces, the translational motion of which is given by means of inductors connected in series with copper plates having advantages over existing ones.

Before considering the scientific research and the results of this work in more detail, let us consider what an electric power generator is and its general principle of operation.

II. Analysis of Counterpart

An electric generator is a device in which non-electric forms of energy (mechanical, chemical, thermal, nuclear, or atomic) are converted into electrical energy. [1]

Nowadays, the most common type of generator is an induction electromechanical generator. The absolute majority of thermal, hydro-technical, wind, nuclear, tidal, geothermal power plants use this type of generator.

An electromechanical generator is an electrical machine in which mechanical energy is converted into electric field energy, spent on the ordered or directional movement of electrons of electric charges.

The simple direct current generator (Fig. 1) is a frame of a conductor placed between the poles of a magnet, the ends of which are attached to insulated semi-rings called collector plates. Positive and negative brushes are pressed against the semi-ring (collector), which are closed by an external circuit through an electric bulb.

It is necessary to rotate the conductor frame with the collector in order in order to operate the generator [2].

In accordance with the right hand rule, when a frame of a conductor rotates with a collector, electric current is induced in it, changing its direction every half-turn, as magnetic lines of force of every side of the frame intersect in one or another direction. The current in external circuit flows in one direction, changing only in magnitude from 0 to the maximum.

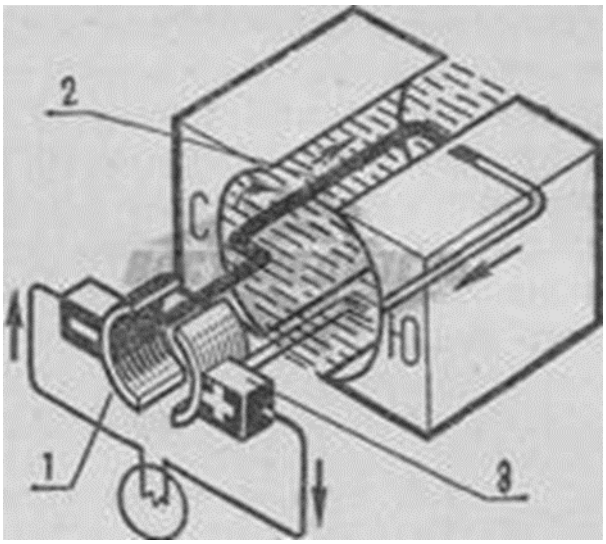

Fig. 1. The circuit of simple direct current generator: 1 — semi-ring or collector plate; 2 — generator frame; 3 — generator brush

The principal device of simple alternating current is shown in Fig. 2. In this generator, every end of a conductor frame is attached to its own ring, and a generator brushes are pressed against the rings. The brushes are closed by an external circuit through an electric bulb. When the frame with rings is rotated in a magnetic field, a generator produces an alternating current that changes the value and direction [1, 2] every half-turn.

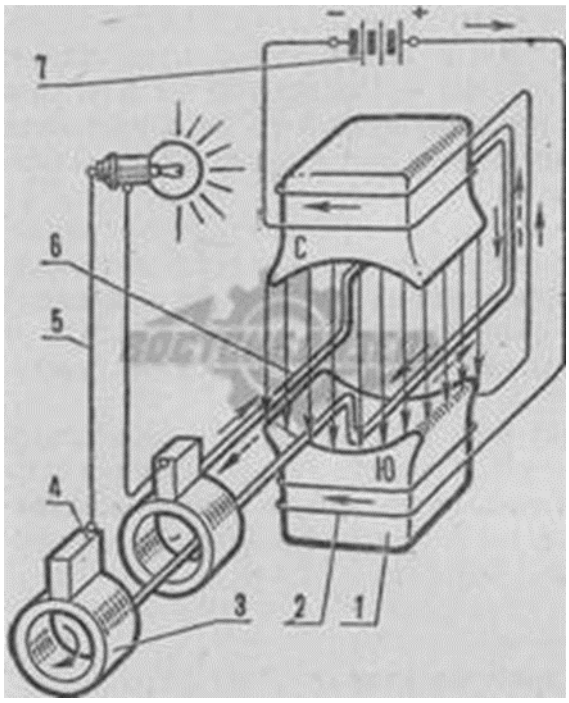

Fig. 2. The circuit of simple alternating current

A. The main elements of the circuit of simple alternating current:

- 1– electromagnetic pole;
- 2 – launching coil;
- 3 – contact ring;
- 4 – generator brush;
- 5 – external circuit;
- 6 – conductor frame;
- 7 – direct current source.

The simple three-phase generator has three frames (windings) of wires that are shifted with respect to each other around a circle of rotation by 120 °. The three-phase current changes its value and direction every 120 ° turn [3, 4].

III. Comparative Analysis

The generator we are creating will completely replace the existing electromechanical generator operating on the basis of electromagnetic theory of Faraday.

A. The disadvantages of existing generators:

- 1 – structural complexity;
- 2 – technological complexity of assembly and disassembly of a generator;
- 3 – repair capability only under the conditions of special technical plant;
- 4 – frequent breakdown associated with bearings, rubbing current stripping devices (carbon electrodes) and electronic current conversion systems (diode bridges).

Our generator does not have all the above mentioned disadvantages, since receiving high-density current is governed by the number of rotations of a generator, and there are no moving parts (only one closed bearing) and there are no electronic systems. The current is pulsed and direct, and more smoothed, because the magnetic field (Lorentz force) acts on the electrons from the plate constantly, the decrease of magnetic field of the front magnets is replenished by the following magnets, since they are placed at an angle of 550 to the diameter of a generator.

There are many different generators of electric current, differing in their design and advantages in certain areas using the principle of electromagnetic induction, but there is no generator similar to our device.

Let us consider several examples of similar devices taken from published articles of databases with open access:

- Hygro-electric flexible fiber generator;
- Multistage rotary magnetic field generator.

B. Hygro-electric flexible fiber generator

It is extremely important to create an energy generator that can actively produce energy and use it in a new generation of electronics suitable for carrying and self-service. We are creating new graphene oxide (GO) coaxial fiber (FHEG) based hygro-electric generator. Electricity production with changes in humidity is reasoned by the directed movement of

charged hydrogen ions of GO. By changing the humidity to 70%, FHEG can provide a high power density of ~ 0.21 μW cm -1. The output power can be easily enhanced by simple connection in series / parallel.

In addition, FHEG demonstrates outstanding engineering performance, which can be conveyed in various forms and designs on demand. Excellent compatibility with woven materials allows carrying the form factor of electronic devices. Impressively, an integrated FHEG device can drive a multitude of practical devices, which indicates its widespread use in autonomous electronics and systems.

Graphic abstraction. A fiber-shaped generator with excellent engineering performance and good compatibility with woven materials was developed, which provides high power density of ~ 0.21 μW cm -1 with moisture stimulation, and also offers a huge potential in the next generation of carrying and self-electronics and systems with electric drive. [5]

C. Multistage rotary magnetic field generator

During the course of the research, a prototype generator of a multistage rotary generator with a rotating magnetic field was developed. The power can be greatly improved through the use of a multi-stage rotor design. In order to improve the power of the prototype multistage rotary generator, the authors of the research, conducted theoretical and experimental research.

The proposed generator is characterized by simulation of performance in different parameters of an electric generator of a rotating magnetic field, such as the influence of the number of permanent magnets and windings of axial, the number of rotations of windings and the distribution of permanent magnets, etc.

The power of an optimized electric generator can be increased from 1.2 to 5.7 mW. In order to estimate the effectiveness of a multi-stage installation, a test platform of a rotary generator was placed under water. The simulation results comply with the experimental results.

The power of the generator obviously increases with increasing flow rate.

Fig. 3 (a) - (c) shows schematic illustrations and photographs of a produced magnetic field rotating generator.

The prototype consists of parts of a stator and rotating parts. The body of a stator is made of 4 mm thick plexiglass, and the windings are placed on the inner surface of the body of a stator. The lower part of a stator is crossed. The blade of a propeller is received in rotating part, and it is fixed on the bottom by a shaft. Magnets are placed on the outer surface of the body of an impeller.

Fig. 3 (c) is a prototype of a multistage rotor of a magnetic field generator, two rows of coil windings are arranged in chessboard order, and magnets are also arranged in chessboard order.

As a result of the presented research work, the authors developed a prototype of a new type of generator; undoubtedly, this developed device is a competitor in a certain area. However, the above described generator is partly of the same design as the existing generator devices. The device we are developing is very different from the one described above in terms of its design, and it is its advantage [6].

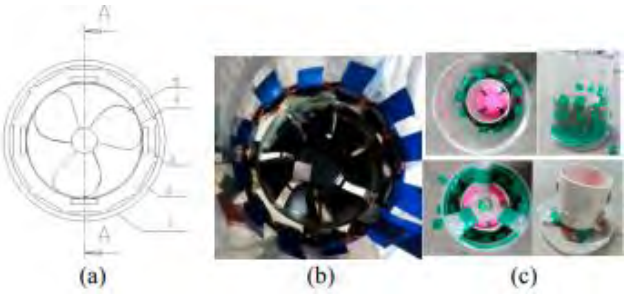

Fig. 3. The design of the device being developed

D. The description of the design of the device being developed

This device (Fig. 4) uses the principle of electromagnetic induction. There is a copper plate here (5) located in the middle of a case, with permanent magnets (4) on both sides. When a drive roller (3) is rotated, the permanent magnets rotate, thus forming a continuous effect on copper plate, as a result of which we obtain a direct current of high density.

This generator can be used as:

- An auto-generator;
- An industrial generator;
- A consumer generator.

It has the following advantages over the existing ones:

- It is less technological in production and simple in the design;
- It is economically sound (low cost price);
- It has the possibility of increasing the device in order to obtain more electricity, without a significant increase in the volume of the device;
- It has the possibility of repair in field or road conditions;
- It obtains a high density of electric current;
- It has no friction current pick-up devices, electronic current transducers and complex parts requiring prefabrication.

According to unified theory of Maxwell “On the unity of the electromagnetic field”, it followed that a magnetic field always acts towards moving charge, through its magnetic field. The idea was (through the rotation of the magnetic field of permanent magnets) to force electrons in copper segments, by means of the Lorentz forces, to move them in an ordered (or directional) manner.

The schematic diagram of a generator consists of the following main elements:

- 1 – locking nuts;
- 2 – beads for nuts;
- 3 – bringing roller;
- 4 – permanent - magnetic nodes;
- 5 – copper plate with 8 units;
- 6 – impeller;
- 7 – axial bearing;
- 8 – body.

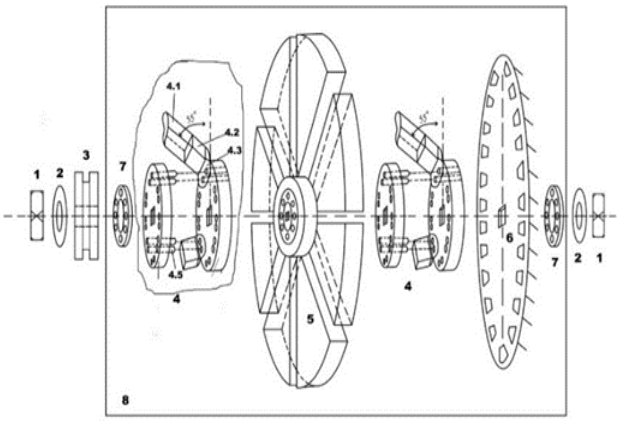

Fig. 4. Schematic diagram of the generator

The construction of node with permanent magnets:

- 4.1 permanent magnets;
- 4.2 magnet fixing yoke;
- 4.3 yoke attachment;
- 4.4 wrapped cover for yoke fixing;
- 4.5 bolts for fixing the cover to the base 6;
- 4.6 base for fixing the yoke.

Equivalent generator circuit consists of the following main elements:

- 1 – copper plate on the bearing;
- 2 – permanent magnets: a – South (S),

b – North (N)

- 3 – the yoke with permanent magnets;
- 4 – a bearing for a plate;
- 5 – tetrahedral generator axis.

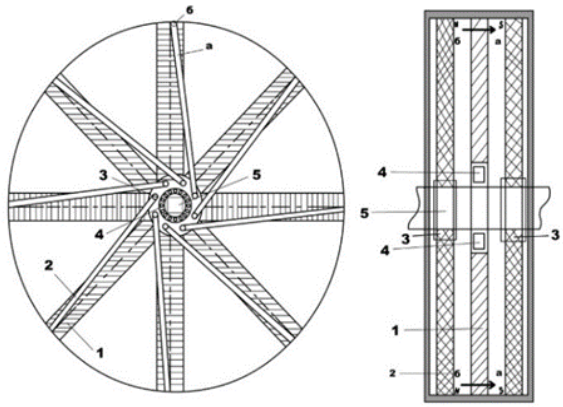

Fig. 5. Equivalent generator circuit

This idea did not justify itself, since the magnetic field created inside the segments eddy, parasitic currents, overheating the system.

In order to derive eddy currents, we used the Faraday theory, the theory of electromagnetic induction.

If we received Ei = 0.321 V at the output from pure segments in a magnetic field, then in the next stage using coils (50 turns) of inductance connected in series with the segments, we got Ei = 1.2 / 1.5 V. Further work on the increase of EMF induction and testing of the generator was at the second stage.

For the primary assembly of the generator, magnets, copper, bearing, body, compass (for determining the polarity of the magnets), aluminum blanks (for bringing rollers), drive belts, electric motor, autotransformer (for disassembling and assembling inductors) were obtained.

Fig. 6. Designed prototype of principle sample

The work on the development and production of parts of the generator were performed:

- copper plate segments;
- segment fitting;
- segment processing;
- made of plexus – creating a magnetic node;
- made of a sewer plastic pipe – casing;
- production of rollers made of aluminum blanks;
- assembly;
- primary setting.

The setting is assembled from multiplex fiberboard, which is a good electrical insulator and structural material.

IV. CONCLUSION

In the course of the research we managed to implement the idea of "High-density electric current generator", scientifically substantiate its viability (get Ei = 1.2 / 1.5 V, on copper plates without inductors), make parts, obtaining various materials and assemble a primary sample.

Further testing of the generator assumes a current-voltage characteristic, which gives us the opportunity to determine the output power of the generator, estimated to 1 kW.

The generator requires further research and improvements, because it is not only practically useful, but also of scientific interest, since the system, electromagnetic interaction, etc are different.

Small dimensions, pulsed direct current, simplicity of the entire system and low producibility make our generator competitive in the market.

The above mentioned aspects show that it is necessary to continue the tests, to work on the improvement of the generator and to make it marketable.

If we talk about the evaluation of the results obtained during the implementation of research activities (the reasoned evidence, the arguments of the decisions made, the forecast of the prospects for its implementation and commercialization), indicating the completeness of the work, it is possible to state the following.

The performed research shows that reducing the direct current resistance of coil wire, by connecting the coil turns in parallel, rather than in series, reduces the resistance. The current in the coil increases multiple times the number of turns, so the current density, magnetic flux, etc., increase accordingly, because a coil can perceive both magnetic flux and create it. The solution of the problem is testing innovations with the appropriate equipment. It is necessary to create drawings and assemble a plant sample (a product) according to these drawings.

When the above mentioned work is performed, the generator will take a reliable place in the market.

Acknowledgements

We would like to express gratitude to the rector of the federal state budgetary educational institution of higher education "Chechen State University".

Dear Zaurbek Aslanbekovich, we are employees, express our gratitude for your responsible and attentive attitude, for patience, competence and continuous development of the organization where we all work. Thank you for the generous awards with which you encourage our work. Thank you for leading our educational institution to a brighter future, opening up new perspectives. Thank you for your help in achievement of our goals, solution professional tasks and implementation of plans.

We appreciate your great work and are well aware of the degree of your contribution to our professional development. We wish you energy, strength, patience, good luck and new professional success. Let only wonderful employees meet you and only good events pursue you.

References

[1] M. Katsman, "Electric machines," a textbook for students of secondary vocational educational institutions, 3rd edition, High school; Moscow: Academy, 2000, pp. 270-288.

[2] A.I. Voldek "Electric machines," Leningrad: Energiya, 1974, p. 172-200.

[3] M. Katsman, "Electric machines," a textbook for students of secondary vocational education of educational institutions, 3rd edition; High school; Moscow: Academy, 2000, p. 208-229.

[4] A.A. Usoltsev, "Electric machines," Tutorial, Editorial and Publishing Department of St. Petersburg State University of Information Technologies, Mechanics and Optics, 2013, p. 366-368.

[5] Nano Energy, vol. 53, pp. 698-705, November 2018.

[6] Energy Procedia, vol. 136, pp. 121-126, October 2017.