ATLANTIS PRESS

Advances in Engineering Research, volume 165

1st International Conference on Materials Engineering and Management - Engineering Section (ICMEMe 2018)

Design Window Curtain Automatic Ergonomic Based On Arduino Uno Atmega328

1st Suradi
Industrial Engineering, Faculty of Engineering
Universitas Islam Makassar
Makassar, Indonesia
suradi.najamuddin@yahoo.com

2nd Saripuddin M
Mecanichal Engineering, Faculty of Engineering
Universitas Islam Makassar
Makassar, Indonesia
shirua01@yahoo.co.id

3rd Andi Haslindah
Industrial Engineering, Faculty of Engineering
Universitas Islam Makassar
Makassar, Indonesia
andihaslindah.dty@uim-makassar.ac.id

4th Ahmad Hanafie
Industrial Engineering, Faculty of Engineering
Universitas Islam Makassar
Makassar, Indonesia
ahmadhanafie.dty@uim-makassar.ac.id

***Abstract*—Design is a design stage that has the purpose of designing a new system that can solve problems related to the selection of the best alternative system. Ergonomics is the science of other multidisciplinary learning that bridges some disciplines and professionals, as well as summarizes the information, findings, and principles of each of these scholars. The scholarship distinguishes between physiology, anatomy, psychology, physics, and engineering. The research methods to be used are the tools, people using ergonomic automation windows. This design will be designed with automatic javelin function and automatic cover based on arduino uno microcontroller. Automatic ergonomic design result, ease the user in doing activities and efficient in doing the job and also comfortable using Arduino uno using arduino uno Atmega328 microcontroller on the screen.**

***Index Terms*—Design, Ergonomics, Arduino Uno, Microcontroller Atmega328**

I. Introduction

Ergonomics has been part of the development of human culture since 4000 years ago. The development of ergonomics begins when humans design simple objects, such as stone to help the hand in doing the work until the repair or changes to the tool to facilitate the user.

Human life can not be separated from the interaction with other humans and the environment. An interacting human with the environment residence, room, campus, highway, and others. The environment can not necessarily tell what it feels to humans directly. Therefore a tool is needed. One of the tools that can be used to interact is display. The display made can be one of the media delivery of information from the environment to humans.

Arduino is made with the aim to facilitate the experiment or the embodiment of various equipment based on a microcontroller, for example: monitoring the water level in the reservoir, tracking the location of the car, automatic access door of the room and others. So with the function of this technology that we use to design the tool. Humans who have been doing the job simply put in a window curtain that almost every day is done. The function of the curtain is to reduce the intensity of light into the house, then when the afternoon we close the curtain again or when the condition of cloudy or rain fall, it requires energy that can not be underestimated or not ergonomic Ergonomic how humans do work efficiently, effective, comfortable and safe in doing a job. The problem then how to design ergonomic window curtain automatically based on Arduino Uno ATMega328 based microcontroller.

ATMega328 is an 8 bit AVR family microcontroller. This chip has 32 KB ISP flash memory with read-write capability, 1 KB EEPROM, and 2 KB SRAM. From the capacity of its 32 KB memory is the chip is named ATmega328. ATmega328 became quite popular after the chip was used in the Arduino board. With Arduino being supported by Arduino IDE software, programming the ATmega328 chip becomes much more Ergonomic.

.

II. Literature Review

Design is the depiction, planning and sketching or arrangement of several separate elements into a unified whole and functioning system design can be designed in the form of a flow system (system flowchart), which is a form of graph tool that can be used to indicate the sequence process of the system [1]–[3] . The design is the design stage has a purpose of designing a new system that can solve problems faced by companies obtained from the selection of the best alternative system [1]. Designing is the process of developing a new system specification based on the recommendations of system analysis. Based on the above understanding the author can conclude that the design is a process to create and design a new system [4], [11]. The system is a set of elements that are combined with each other for a common purpose [13]. The system is a set of interrelated or integrated elements intended to achieve a goal [11]. The system is a collection of elements that interact to achieve certain goals

[10]. The microcontroller is a computer system that all or most of its elements are packaged in one IC chip, so often called a singlet chip microcomputer. Furthermore, a microcontroller is a computer system that has one or several very specific tasks, in contrast to content that has various functions. Another difference is the RAM and ROM are very different between computers with a microcontroller. In a microcontroller, ROM far lebuih big compared to RAM, while the computer or PC RAM far greater than ROM [15], [16].

ATMega328 became quite popular after the chip was used in the Arduino board. With Arduino supported by Arduino IDE software, programming the ATMega328 chip becomes much simpler and easier. Basically, the Arduino board is about ATmega328. Board Arduino is designed to make it easier for us to program and connect the ATmega328 chip with other components. With the Arduino board, whether Arduino UNO, Arduino Mega 2560, Arduino Nano, and Arduino Pro Mini, all help to simplify the process of creating a microcontroller circuit [5]–[7]. ATMega328 has 3 main PORT, i.e., PORTB, PORTC, and PORTD with total pin input / output of 23 pins. PORT can be functioned as input / output digital or functioned as other peripherals. Arduino Uno is a microcontroller board based on ATmega328 (datasheet). It has 14 input pins from digital output where 6 pin input can be used as PWM output and 6 input analog pin, 16 MHz crystal oscillator, USB connection, power jack, ICSP header, and reset button. To support the microcontroller in order to use, simply connect only the Arduino Uno Board to the computer using a USB or power cord with AC-to-DC adapter or battery to run it. Uno is different from all previous boards in terms of USB-to-serial connections using Atmega8U2 features programmed as USB-to-serial converters different from previous boards that use FTDI USB-to-serial driver chips [9], [12]. Ergonomics

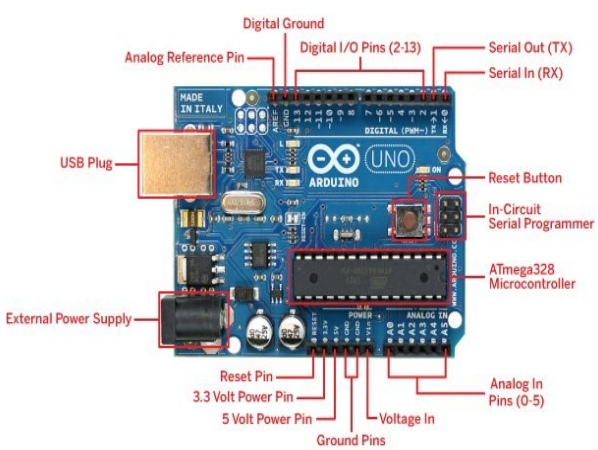

Fig. 1. Arduino uno

is an applied science that explains the interaction between man and his workplace. Ergonomics, among others, examine the physical abilities of workers, workplace environments, and tasks that are equipped and applied this information with the design of the tool model, equipment, working methods that are needed safely throughout the task. Each worker has the sole responsibility of knowing about the safety focus of the working environment for themselves and their bosses. The ultimate goal of the ergonomics program is to perfect work by minimizing possible work pressures for the body [7], [8].

Dr. Andris Freivalds of Pennstate University mentions that elements of an organizational system are tasks (jobs), organizations, equipment, people and the environment. The diagram is as follows:

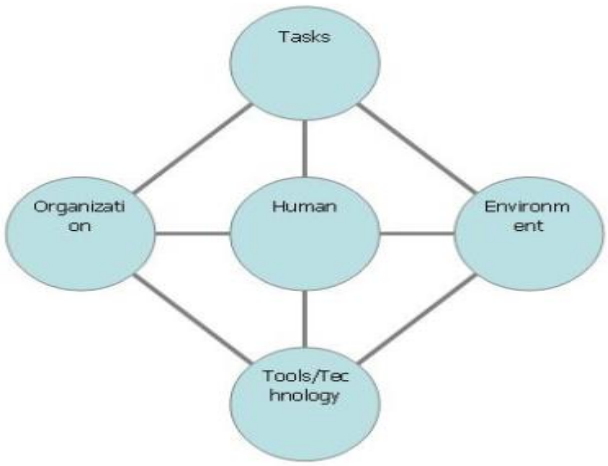

Fig. 2. System Elements

All elements interact with each other so that to maintain the balance of the system should be formed suitability between one element with other elements. This is where the main macro ergonomics role, namely as a keeper of the balance of the system. Then how can the ergonomic macro keep the balance of the system? The following case study is one example of how macro ergonomics do it

III. Research Method

The research method used the method of designing the tool, which is designing an automatic window curtain tool in general. Where in this design are designed tool with function open and close automatic javasela curtain based arduino uno microcontroller? Design Analysis

This research using an LDR sensor which receives light from an object then processed using arduino. Once received the sensor give instructions to the servo motor in closing and opening the curtain automatically.

1) Tool Design Method:

2) Hardware Design: The first hard design is to prepare Aluminum box-shaped windows with type 2.4x1x0.30 with a length of 1.3 m and fiber size 1x2 m. Then the pieces of fiber are connected to form a circuit. An Arduino box with 12.5x7.5 is installed separately on the Aluminum window [14].

The next hardware design that connects arduino pins with ultrasonic sensors and LCD. The pins for connecting Arduino,

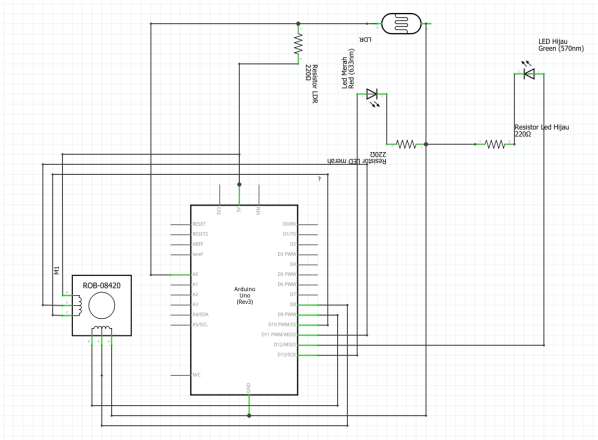

Fig. 3. Sketch Image of tool

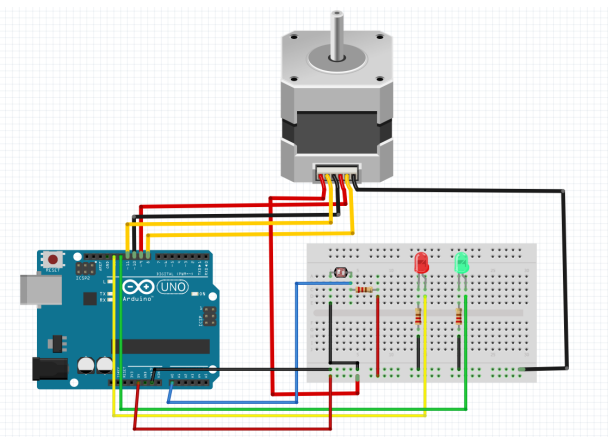

Fig. 4. Design tools

LDR sensor and LCD are the pins connected are pin 12 as the input pin of RS pin, pin 11 as input LCD pin Enable, pin 5 as input LCD pin D4, pin 4 as input LCD pin D5 , pin 3 as input lcd pin D6, pin 2 as input LCD pin D7, grounding as LCD input pin R / W, grounding as lcd input pin VSS, 5 Volt as LCD pin input VCC and grounding are taken directly on power adapter connected with an arduino module, and the connected pins are GND sensors connected on PCB board (-), Echo sensor connected on pin 10 arduino, Trigger sensor connected on pin 9 arduino, and VCC sensor connected on PCB (+) board. Lights and of course Arduino Uno ATMega328 which is where the center than to control Automatic blinds.

3) System Design and Testing Tool: After doing the design of hardware and software then the next step is to test the tool, where the curtain is placed near the window, and then the sensor is placed in accordance with the light what is in want is the first outdoors that can absorb the sun and place in the room

Fig. 5. Design tools

which can absorb lights after that then the LDR sensor also responds, continued in arduino uno after processing, continued kerelay to set the electric pressure to balance, and forwarded to the light to produce light. as shown in the figure 6:

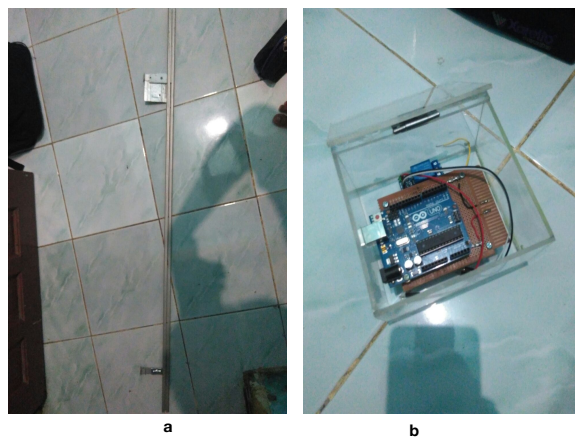

Fig. 6. Testing Tools

Figure 4. shows an automated curtain test using the sunlight and lights where to test the sensitivity of the LDR light sensor which is then processed by the arduino to run the DC Motor which then opens and closes the window blinds automatically. From the above test can be taken data that tools work in accordance with the commands entered in arduino uno ATMega328 and the supporting components of the tool works and works well.

4) The Test Tool Measurement Result Table: The light intensity it can open and close the window automatically, that is, the intensity of the light set in arduino less than 210 and more than 110 will open then automatically stops at > 210 and, or ≤ 110 or stay at the light intensity and apply also

to <110 and if the light intensity does not exist or > 0 then automatically the window will be closed.

Then if using measurement with lux system Testing done for 2 days, every day of testing starting from 06.00-18.00 WIB. The results showed that the highest intensity of sunlight occurred between the hours of 11:00 to 13:00 pm with a sun light intensity value of 98,000 lux-116,200 lux. While the highest solar cell output power of 14.80 watts with the measured sun light intensity 116,200 lux. And it's the same as the LDR Light sensor which only focuses on its light power. Automatic ergonomic curtain design results, so that users feel

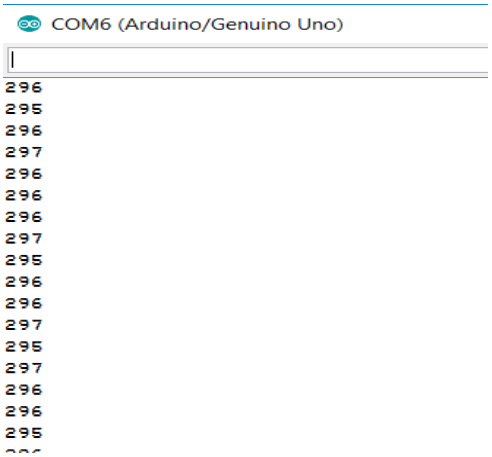

Fig. 7. Display Light intensity in Arduino Uno software

effective in carrying out activities and efficient in doing the job and comfortable and safe by using Arduino uno using arduino uno microcontroller Atmega328 on automatic window blind tool successfully used.

The working system of an integrated system, which becomes the object is either sunlight or light with certain light intensity. The sensor will detect the object by sending the LDR signal, the light-absorbing LDR signal from the object will be processed by the arduino, and the arduino will process the sensor readings, and the result will be informed to the indicator light that is LED.

IV. Conclusion

The result of ergonomic automatic window curtain design is the system we make; the object is the light both the sun and the light with certain light intensity. The sensor will detect the object by sending the LDR signal, the light-absorbing LDR signal from the object will be processed by the arduino, and the arduino will process the sensor readings, and the result will be informed to the indicator light that is LED. The result of ergonomic automatic window curtain design is able to save the work time so efficient and effective, and the placement of panels match to dimensions of the user body gives a sense of comfort and security.

References

[1] A. B. ladjamudin. 2005, "Analisis dan Desain Sistem Informasi" . Tangerang : Penerbit Graha ilmu.
[2] A. Hanafie, A. Haslindah, M. Saripuddin, "Karakteristik Antropometri Pengguna Mesin Perontok Padi (Combine Harverter) Pengelolaan Hasil Panen yang Ergonomis", Prosiding Seminar Nasional Telnologi Indonesia V, hal 52-57, Makassar 12 Juli 2017.
[3] A. Hanafie (2007), "Modifikasi Helm Standar Kendaraan Roda Dua Yang Ergonomis Bagi Penguna Telpon Seluler", Jurnal Iltek, Vol. II, Nomor 4, April 2007, Hal 313-319, Fakultas Teknik Univ. Islam Makassar.
[4] A. Hanafie, A.Haslindah, Muh. Fadhli, "Pengembangan Mesin Perontok Padi (Combine Harverter) yang Ergonomis Untuk Meningkatkan Produksi", Prosiding Seminar Nasional Tahunan Teknik Mesin Indonesia-XIV, Banjarmasing, 7-8 Oktober 2015.
[5] A. Hanafie, H. Abbas, Lawalenna, S. Hami, "Study Of Vehicles Utilities And Load-Unloading Facilities Of City Public Transport Based On Ergonomics Assessment", International Journal of Advances in Scientific Research and Engineering (ijasre.net) Volume-1, Issue-3, December 2016.
[6] A. Haslindah, "Analisa Penyerapan Tenaga Kerja Wanita Pada Pengolahan Pasca Panen Sektor Pertanian Di Kab. Pinrang", Prosiding Seminar Nasional ATIM III 2015, hal 467 - 471, November 2015.
[7] Budiharto,W., "Belajar Sendiri 12 Proyek Mikrokontroler Untuk Pemula" Jakarta : Penerbit Elex Media Komputindo, 2007.
[8] H.W, Hendrick, . M.B. Kleiner, "Macroergonomics Theory, Methods, and Applications".Lawrence Erlbaum Associates, Inc., Publishers,Mahwah,New Jersey, (2002).
[9] Fatta, Al Hanif. . "Analisis dan Perancangan Sistem Informasi". Yogyakarta : Penerbit Andi, 2007.
[10] H.M. Jogiyanto . "Analisis dan Desain Sistem Informasi, Pendekatan Terstruktur Teori dan Praktek Aplikasi Bisnis". Yogyakarta : Penerbit Andi., 2005.
[11] A. Kadir, "Pengenalan Sistem Informasi" . Yogyakarta : Penerbit Andi. Kusrini, dkk. 2007, Tuntunan Praktis Membangun Sistem Informasi Akuntansi dengan Visual Basic dan Microsoft SQL Server". Yogyakarta : Penerbit Andi.
[12] Malik,Juwana. 2009, "Aneka Proyek Mikrokontroller PIC16F84/A". Jakarta : Penerbit Elex Media Komputindo.
[13] Murdick, Ross. 1993. "Perancangan dan Pembangunan Sistem Informasi". Yogyakarta : Penerbit Andi
[14] Sudjadi. 2005, "Teori dan Aplikasi Mikrokontroler" Yogyakarta : Penerbit Graha ilmu.
[15] Wahyuddin. 2007, "Belajar Mudah Mikrokontroller AT89S52 dengan Basic Menggunakan Bascom-805". Yogyakarta : Penerbit Andi.
[16] Suradi, H. Abbas, W. Tjaronge, V. Sampebulu, Analysis Production Process Quality Standard Time Brick Light (Autoclave Aerated Concreted/AAC), The 2ND International Symposium on Smart Material and Mechatronics 2015. ISBN : 978-979-17225-8-2. October 26-29, 2015, Engineering Faculty of Hasanuddin University, Gowa Campus. pp.111-114.