ATLANTIS PRESS
Advances in Engineering Research, volume 165
1st International Conference on Materials Engineering and Management - Engineering Section (ICMEMe 2018)

The Design of internet Of Things Solutions for National Fishery Logistics System

Muhammad Takdir Muslihi
Electiracal Engineering
Universitas Fajar
Makassar, Indonesia
takdir@unifa.ac.id

Andini Dani Achmad
Electrical Engineering
Hasanuddin University
Makassar, Indonesia
andini.achmad@unhas.ac.id

***Abstract*—The problem of imbalances in inter-regional fish stocks, the monopoly of fish distribution by some collectors, the scarcity of fish stocks in some regions still occurs in Indonesia while the country has established National Fishery Logistics System (NFLS). One of the factors causing the problem is of wild fish data is not inputted directly in the dock where common people usually purchase fishes so national data collection does not include the amount of fish consumption in reality.**

This study aims to provide solutions to the problem by utilizing the Internet of Things. We design a system that detects the stock (weight) of wild fish at the docks by utilizing load cell weighing sensor, GPS, and microcontroller. Weight and position data are sent to the database server by SIM900 via gprs or sms. Design of this system is expected to support NFLS in collecting fish data at the docks in order to support the government for planning, arranging, and distributing seafood to each region

Keywords—IoT, Seafood supply chain, microcontroller, load cell weighing sensor.

I. INTRODUCTION

The fisheries sector is a strategic and important sector for Indonesia. In the last five years, fisheries production was increased [1].This phenomenon is expected to improve the welfare of fishermen, supply support for small and medium enterprises, and fair fish distribution to every region. To achieve this, the country has established the National Fish Logistics System (NFLS).

NFLS aims to increase capacity and stabilization, expand connectivity, and improve the efficiency of fish supply chain management, materials and production equipment, and upstream to downstream information [8]. However, in fact NFLS has not been operating optimally. This is indicated by the problem of imbalances of inter-regional fish stocks, the monopoly of fish distribution by some collectors, and the scarcity of fish stocks in some areas. Until now the wildfish data input is not done directly at the harbor fish market. The input of fish data is done after the fish stock goes into the fish processing industries, so the national fish data does not cover all the data in the field**.** By identifying the weight of fish in each habor, Stakeholders will be more effective to assist the government in planning, managing and distributing fish to each region. This can reduce the monopoly and scarcity of fish supply for both household consumption and industry or small and medium enterprise [9]. By knowing the amount of fish weight in each harbor then the fishermen no longer need to do a cheap sale to the factory so that the welfare of fishermen can be increased.

II. PROPOSED SOLUTION.

One of given solutions is by utilizing the Internet of things (IOT). IoT is about how connecting sensors to cloud devices can be beneficial for everyday activities. The real value of the IoT lies in revolutionizing the way the world does business—and, in this case, the way food supply chains operate[5]. A system proposed in this paper aims to detect fish stocks in the harbor fish market as the upstream of fish supply chain ,where fish data are not recorded by the NFLS database. The proposed system was developed to detect and transmit fish stock data in the Harbor. The system , which is developed by minimizing user input for ease of use, consists of microcontroller arduino uno, GPS, SIM 900, Weight Load Cell Sensor, and database Server.

A. Microcontroller Arduino Uno

Arduino Uno R3 is a board based on microcontroller ATMega 328. This board has 14 digital input / output pin (where 6 pins can be used as PWM ouput), 6 analog inputs, 16 MHz crystal oscillator, USB connection, electric jack and reset button. These pins contain everything needed to support the microcontroller, Power can be obtained by using a computer with a USB cable or can be obtained from AC-DC or adapter battery. Arduino Uno R3 is different from all previously board because the Arduino Uno R3 does not use the USB-to-serial FTDI chip driver, but using features from ATMega 16U2 programmed as a USB-to-serial converter. This converter is for serial communication to computer via USB port [7].

Fig 1

B. Global Positioning Sytem (GPS)

NAVSTAR-GPS which stands for Navigation System with Timing and Ranging Global Positioning System. Developed by the Department of Defense and administered by the United States Air Force 50th Space Wing. Despite being in the US military program, GPS can be used for civil and military purposes worldwide without paying subscription or maintenance fees for using GPS. GPS has a minimum of 24 satellites (maximum 32 satellites) at an altitude of 20,180 km from the earth's surface and orbits the earth in 6 different orbits to ensure at least 4 satellites in communications at any point on planet Earth. Until October 8, 2012 there are 31 GPS satellites orbiting the earth and operate in full. The use of GPS is very broad in various fields including military, tourism, geological mapping, transportation, logistics, research and more [4].

C. GPRS

General Packet Radio Service (GPRS) is a data packet technology that allows GSM operators to provide wireless data services, such as e-mail and internet access. GPRS is often referred to as 2.5G technology as it is the first step for GSM operators to third generation (3G) and the initial step of wireless data service startup. GPRS supports maximum data rates for downloads of up to 115 kbps, with an average speed between 40 - 50 kbps. GPRS is fast enough when used for applications such as Multimedia Messaging Service (MMS) and web browsing when compared to cable dial-up modems. GPRS also provides an always-on data connection, so users do not have to log-on every time they want data access. The data packet architecture also means that users pay their connection rates based on the number of bytes of data downloaded / uploaded (volume dependent charging), not based on the duration of usage time (time dependten charging).

GPRS is the most widely supported wireless data packet technology in the world. Like GSM, GPRS supports international roaming so customers can use their data access services at home and abroad. GPRS is built on the GSM network platform, so almost all GSM devices currently have GPRS capabilities [4].

D. SIM 900

SIM 900 GSM / GPRS Minimum System module is the minimum system for SIM 900 module from ITEAD Studio. SIM900 itself is a module GSM / GPRS Quad Channel made by SIMCom. This GSM / GPRS module can work on 850/900/1800/1900 Mhz frequency and with GPRS mobile station class B class capability. This means that this module can connect with GSM (phone, SMS) or GPRS service simultaneously at the same time . So if the module is used to perform GSM service such as phone, its GPRS service will be stopped temporarily and will be continued automatically after the GSM service is finished. This module requires a voltage source between 4.5-5.5 volts with about 500mA current. This module uses UART to communicate with the controller and can be controlled through AT Command [2].

Fig 2

E. Weight Load Cell Sensor

Load cell sensors when loaded at the iron core then the resistance value in the strain gauge will be changed which is ejected through three cables. Two cables as excitation and one more cord as output signal to its control. A loadcell consists of a conductor, a strain gauge, and a wheatstone bridge [3].

III. PROPOSED SYSTEM

A. Blog Diagram

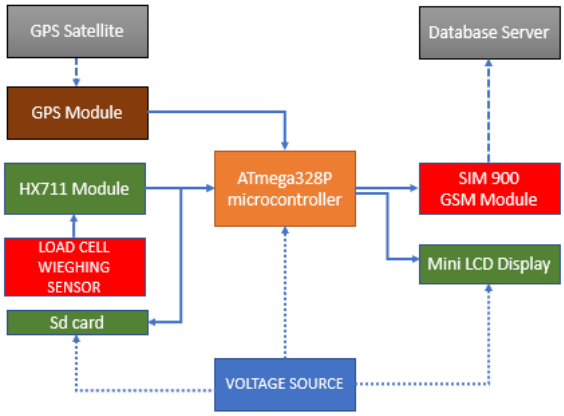

Fig 3

Figure 3 illustrates how the proposed system works. First of all, the GPS module will receive position data from the satellite. Load cell weighing sensor is the main component in this application will be placed under the scales plate. This sensor will detect the weight of the object then the HX711 IC module converts the measured changes in the resistance change and converts it into the voltage magnitude (as the load sensor load amplifier). Furthermore, the output in the form of analog data is then processed in place of data processing and signal conditioning via ATMega microcontroller analog pin of ATMega328 which will convert the analog data into digital output. After the digital output is obtained then the result will be displayed on the 16x4 LCD screen. Two data that have been obtained, gps and weight data will be forwarded to SIM 900 to be sent to database server. There are two options for sending data on SIM 900, ie sending data via (gprs) and Short Massage service (sms). If data is sent via sms then the format of the data sent is # ID_arduino # Weight # Latitude # Longitude. Then the server with the sms gateway will receive the data then input this into the database. Other components of this system are SD Card that serves for temporary storage if data fails to be sent.

B. *Algorithm*

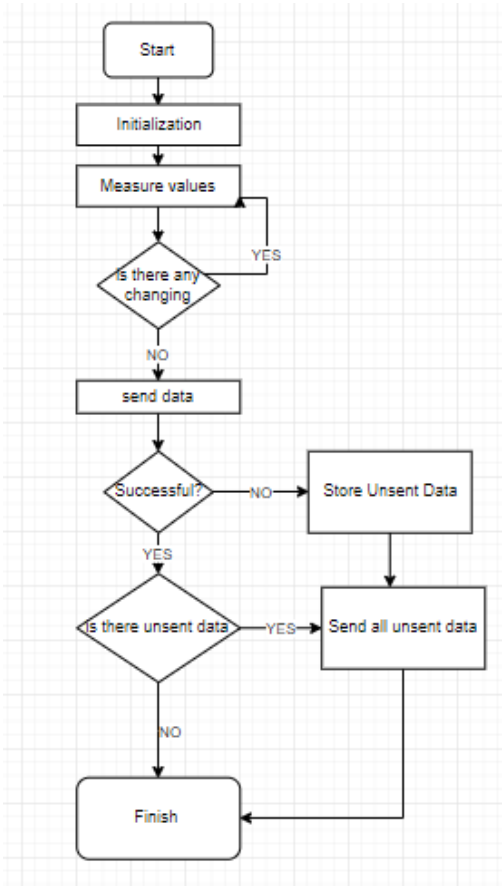

Fig 4

Figure 4 shows the algorithm on microcontroller. First of all is the program initialization, then the program will calculate the weight value of the object from the load sensor and get the position value of the GPS. The program will continue to calculate the weight until no more weight changes for 2 seconds. If no more heavy changes, then the program will

send data to the cloud. Under certain conditions If data transmission fails, due to bad network, then the program will store unsent data. If the program has made it possible to send data then the program will send all unsent data.

C. Web Service

The web service was developed using php and MySQL database.. The service implements all standard operations over a database called CRUD (Create Read Update Delete). The appearance of MySQL database and the corresponding table in the phpMyAdmin panel is shown in Fig. 5.

Browse | Structure

#	Name	Type
1	id	int(10)
2	arduino_id	varchar(10)
3	weight	double(50,0)
4	date_time	datetime
5	lat	varchar(100)
6	lon	varchar(100)

Fig 5

The ID functions as the primary key and is auto_increment. Arduino_id will store the unique id assigned to each microcontroller which will be useful if the system is distributed in multiple places. date_time stores date and time data received from data sent from microcontroller. Weight will store weight data in kg. Lat serves to store Latitude / longitude data while Lon works to store Longitude data / latitude. Latitude is the line that runs between the north pole and south pole, which connects between the eastern and western sides of the earth. Longitude is the longitudinal line that connects between the north and south sides of the earth (poles). By merging these two points we will get the coordinate point of the system on the map.

IV. SUMMARY

In this paper, we introduce a novel IoT system able to track and trace fish from the field through the supply chain. Fish weight data and measured harbor fish market position will be sent to SLIN via SIM 900 (gprs or sms) at the same time. The sent data can help stakeholders for decision making.

REFERENCES

[1] Badan Pusat Statistik Jakarta Pusat , 2017. Statistik Indonesia Tahun 2017. Jakarta Pusat : Badan Pusat Statistik
[2] Datasheet SIM900A. (2009). SIM900 _ AT Command.
[3] Frendi, E., & Ishak, M. (2016). Rancang Bangun Timbangan Digital Berbasis Sensor Beban 5 Kg Menggunakan Mikrokontroler Atmega328, *VI*(1), 23–28.
[4] Jean dan Marie Zogg, GPS Essential of Satellite Navigation Compendium, u-blox AG,2009
[5] Jenifer Sunrise Winter: Ethics Inf Technol. Vol.16 (2014) No.1 p.27.
[6] Poernomo, A., & Heruwati, E. S. (2011). Industrialisasi Perikanan : Suatu Tantangan Untuk Perubahan. *Squalen*, *6*(3), 87–94.
[7] Sudhan, R. H., Kumar, M. G., Prakash, A. U., Devi, S. A. R., & P., S. (2015). Arduino Atmega-328 Microcontroller. *Ijireeice*, *3*(4), 27–29.
[8] Togar M. Simatupang, Alan C. Wright, Ramaswami Sridharan, (2002) "The knowledge of coordination for supply chain integration", Business Process Management Journal, Vol. 8 Issue: 3, pp.289-308
[9] Poernomo, A., & Heruwati, E. S. (2011). Industrialisasi Perikanan : Suatu Tantangan Untuk Perubahan. *Squalen*, *6*(3), 87–94.
[10]Wang Jinpu, Wang Liang, *An Introduction to the Internet of Things*, Peking University Press, China, 2012, p.10.