ATLANTIS PRESS
Advances in Social Science, Education and Humanities Research, volume 242
2nd International Conference on Vocational Education and Training (ICOVET 2018)

IOT Cloud Data Logger for Heart Rate Monitoring Device

Mokh. Sholihul Hadi[1]
Electrical Engineering, Faculty of Engineering, Universitas Negeri Malang, Indonesia
mokh.sholihul.ft@um.ac.id

Ilham Ari Elbaith Zaeni[2]
Electrical Engineering, Faculty of Engineering, Universitas Negeri Malang, Indonesia

Mohamad Dana Maulana[3]
Electrical Engineering, Faculty of Engineering, Universitas Negeri Malang, Indonesia

Aji Prasetya Wibawa[4]
Electrical Engineering, Faculty of Engineering, Universitas Negeri Malang, Indonesia

Arif Nur Afandi[5]
Electrical Engineering, Faculty of Engineering, Universitas Negeri Malang, Indonesia

Abstract--Health maintenance is an important thing in human life and needs of more attention, in particular, heart health. The heart is a vital organ for us. Even the slightest abnormality could make a big influence on our body performance. The heart rate, expressed in rates per minute (bpm), is a parameter to show our heart condition. One way to discover the heart condition is by knowing the heart rate frequency. Heart disease often detected past the symptoms, one being having sporadic heart rates. Therefore, this research aimed to design and build a heart rate monitoring device to detect the blood flow frequency in the pulse. The data then delivered to a communication device using WiFi. Heart rate monitor device contained sensor block, signal conditioner block, and communication block using Wemos D1 ESP8266. This research calculated the number of heart rates from ten respondents to test the device. The pulse sensor detected the respondents' heart rates when strapped. Then, the data converted from analog to digital using Wemos D1 ESP8266. After, Wemos D1 ESP8266 delivered the data to the smartphone. The data also displayed on OLED. The data recorded was saved in the smartphone and can be used as a medical record.

Keywords ---Wemos D1 ESP8266, Android, Pulse Sensor, Heart Rate, OLED

I. INTRODUCTION

Health maintenance is an important thing in human life. A problem in our health affects our daily activities. Health should be a priority for us, in particular, heart health. The heart is a vital organ beside the brain. The heart rate is crucial for human health, especially for cardiac patients that require first aid in the event of an attack [1]. Therefore, monitoring heart rates are important to find out about our health condition [5]. World Health Organisation (WHO) through their data stated that heart disease contributed up to 29% in the cause of death in the world, and 17 million people of the world died due to heart and blood vessel disease [4]. We need a solution to minimize the victim numbers using the fast growth of technological development. The field of electronics becomes one of many developments in technological fields especially for data logger device [10]. Electronic growth also occurred in the medical field, especially in the monitoring section, with one example is Electrocardiogram (ECG). ECG is a medical device used to detect heart rates [6]. Unfortunately, the utilization of ECG is limited. Patients cannot independently operate the ECG machine because it requires special skill.

Heart health changes with the change of a lifestyle, hence, the heart condition can change abruptly — this change, or illness, often known after a visit to a doctor. Considering the length of time and distance, this proved inefficient. Therefore, previous researches tried to make a practical and easy health monitoring device for daily use [8]. There are two ways of monitoring heart rate: direct or indirect. Direct technique means putting the sensor on the heart, while indirect way means utilizing the heart rate by tapping the heart rates [3].

Some researcher [1,2,3] have researched monitoring the heart rate. [1] used online-based monitoring system. the research aimed to connect the doctor and faraway outpatients. [2] used Bee module delivered the collected data wirelessly then uploaded to a website using an ethernet shield. [3] designed a computer-based heart rate monitoring system. these researchs focused on heart rate monitoring. The first research has the advantage of unlimited distance as long as there is an internet connection. However, there is a delay possibility in real-time aspect due to the upload and download processes. Besides, the XBee module is quite costly. Meanwhile, the second research still used a computer to display the data and not using wireless communication.

Based on the problems above, this research aimed to design and build a device to monitor the heart rate to observe the patient condition online via a smartphone. This device also stored the heart rate calculation in the smartphone as a medical record or for further needs. This research subjected adults above 18 years old due to their productive age and their busy schedule. At this productive ages, people often ignore their health due to their full activities, and they always carry their smartphone with them.

II. THEORETICAL FRAMEWORK

A. Heart

The heart is a vital organ and last defense to live. The human cannot naturally control the heart rate because it refers to the time required based on the rate per minute. Generally, it is called beats per minute (bpm) due to the standard time used, that is the minute. The average of adult heart rate is 60-100 bpm. When the heart rate is above or below average, there is a possibility of a problem [9]. The heart rate measurement aims to find out about the heart performance, to diagnose, and to find out an abnormality.

B. Heart Rate Measurement

Heart rate measurement is useful to find out about the body condition based on sex and age. Table 1 and Table 2 display the male and female heart rate criteria based on the age [7].

Table 1 Male Heart Rate

CONDITION \ Age	18 - 25	26 – 35	36 - 45	46 – 55	56 - 65	65+
EXCELLENT	49 - 55	49 – 54	50 – 56	50 – 57	51 - 56	50 – 55
VERY GOOD	56 - 61	55 – 61	57 – 62	58 – 63	57 - 61	56 – 61
GOOD	62 - 85	62 – 85	63 – 86	64 – 87	62 - 87	62 – 85
AVERAGE	86 - 89	86 – 90	87 – 90	88 – 91	88 – 91	86 – 89
BELOW AVERAGE	90 – 93	91 – 94	92 – 95	92 – 96	92 – 95	90 – 93
BAD	94 - 101	95 – 101	96 – 102	97 – 103	96 - 101	94 – 99
VERY BAD	102+	102+	103+	104+	102+	100+

Table 2 Female Heart Rate

CONDITION \ Age	18 - 25	26 – 35	36 - 45	46 - 55	56 - 65	65+
EXCELLENT	54 - 60	54 – 59	54 – 59	54 – 60	54 - 65	54 – 59
VERY GOOD	61 - 65	60 – 64	60 – 64	61 – 65	60 – 64	60 – 64
GOOD	66 - 89	65 – 88	65 – 89	66 – 89	65 - 88	65 – 88
AVERAGE	90 - 93	89 – 92	90 – 93	90 – 93	89 – 93	89 – 92
BELOW AVERAGE	94 – 98	93 – 96	94 – 98	94 – 97	94 - 97	93 – 96
BAD	99 – 104	97 – 102	99 - 104	98 - 103	98 - 103	97 – 104
VERY BAD	105+	103+	105+	104+	104+	104+

C. Pulse Sensor

The pulse sensor is a component in measuring the heart rate. Pulse sensor works by utilizing the light. When the sensor pasted to the skin, half the light will absorb or reflect the organs and tissues, while the other half will pass through the small body tissues. The heart then pumps the blood based on each heart rate that generates pulse waves from the arterial area to capillary tissue where the pulse sensor is. Pulse sensor measures the bpm after obtained interbeat interval (IBI). IBI is the total time based on the heart rate in millisecond (ms) while beat per minutes is the heart rate from the mean ten times of the IBI time. Therefore, when Wemos D1 EPS8266 microcontroller starts with a pulse sensor that is connected to A0 pin, pulse sensor will read the sensor rate every ms based on the measured heart rate. In this research, the pulse sensor works at a 3.3V voltage at Wemos D1 EP8266 microcontroller. Figure 1 displays three pins in the pulse sensor.

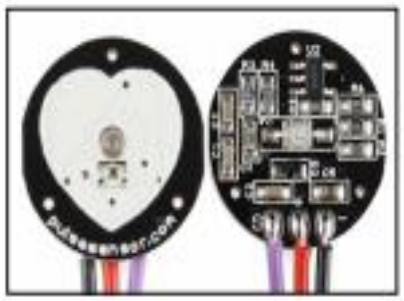

Figure 1 Pulse Sensor

D. Wemos D1 ESP8266

Wemos D1 ESP8266 is one of the board modules that functioned with Arduino especially on a project based on IoT. Wemos D1 ESP8266 works without any connection with another microcontroller, a change from other WiFi modules that require microcontroller as the control or the brain from the series. Wemos D1 ESP8266 works individually due to the CPU inside that able to program through the serial port.

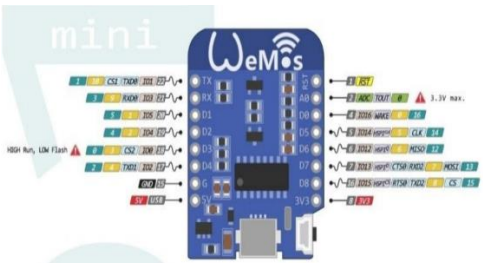

Figure 2 Wemos D1 ESP8266

Wemos D1 ESP8266 has three WiFi modes, e.g., station, access point, and boot. It needs 3.3 or 5V power. Wemos D1 ESP8266 has a processor, memory, and GPIO with 16 pins.

III. RESEARCH METHOD

Generally, Figure 3 explains how the pulse sensor works to process the signal from the heart rate monitor device using IoT system based on Wemos D1 ESP8266.

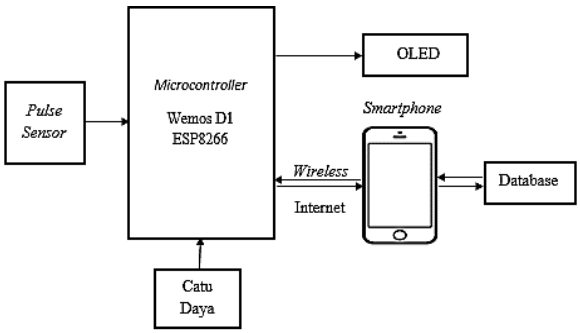

Figure 3 Pulse Sensor Diagram Block

Figure 4 explains the steps taken to design and make the pulse sensor

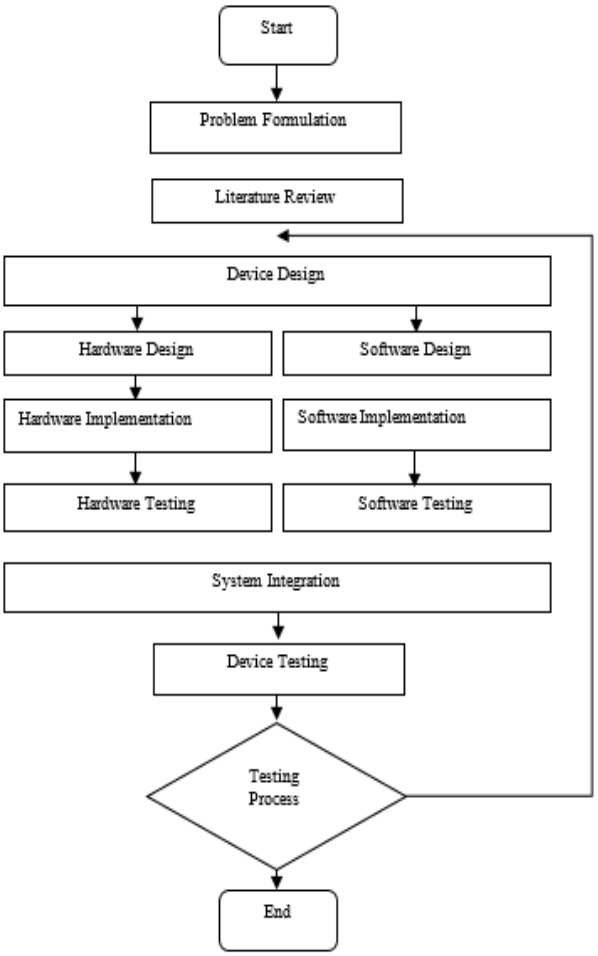

Figure 4 Pulse Sensor Flowchart

Result and Design

There were several tests conducted to obtain the result of this device before concluding.

Device Model Design

The square-shaped device was made to accommodate the need to be put in the flat surface. The sensor was connected to the Wemos D1 ESP8266 board using cable as required. Figure 5 shows the device model.

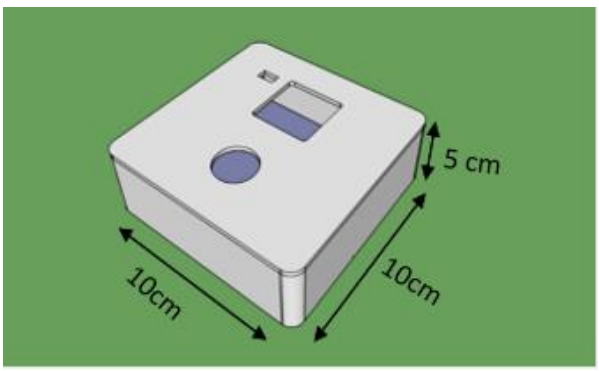

Figure 5 Device Model

Device Series Design

The series used five main components such as the Wemos D1 ESP8266 module, pulse sensor, LM2596, OLED, and a 9V battery, all connected to each pin. Figure 6 displays the series.

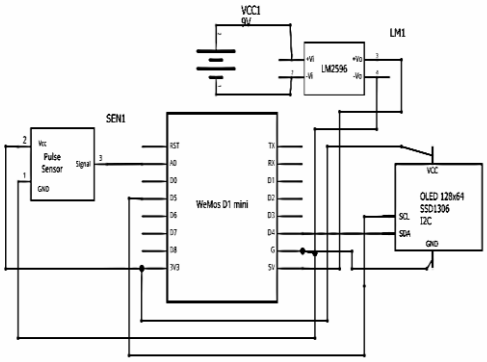

Figure 6 Pin Connection Series

The pins at I/O port used in below design:
Pulse sensor signal pin, connected to Wemos A0 pin as the analog data from the sensor

- GND pulse sensor and OLED pins, connected with Wemos GND pin
- Pulse sensor VCC and OLED pins, connected to Wemos 3v3 pin as the resource
- SDA pin connected to OLED D4 pin as the digital data
- 9V battery positive (+) cable connected to LM2596 In step down
- 9V battery negative (-) cable connected to LM2596 GND step down
- Lm2596 OUT pin (+) connected to 5V Wemos pin as power supply
- Lm2596 Out pin (-) connected to Wmos GND pin

Software Design

Software design explains how the monitoring device works as shown in Figure 7.

Figure 7 Software Performance Flowchart

IV. RESULTS AND ANALYSIS

A. Hardware Testing

1. Pulse Sensor Testing

Pulse sensor testing was conducted to figure the device's precision in calculating the heart rate. This test took the data from ten respondents with five trials. The calculation results from the pulse sensor then compared with the results from the pulse oximeter. The latter calculation was taken as a benchmark for pulse sensor calculation to find out the error or noise during the test. There were two ways of testing such as in normal and post-activity conditions.

a. Equipment Required

The equipment and materials required were:

- PC or laptop 1pc
- Pulse sensor 1pc
- Jzk 302 pulse oximeter 1pc
- Wemos D1 ESP8266 1pc

b. Testing Steps

- Connected the series as in Figure 8

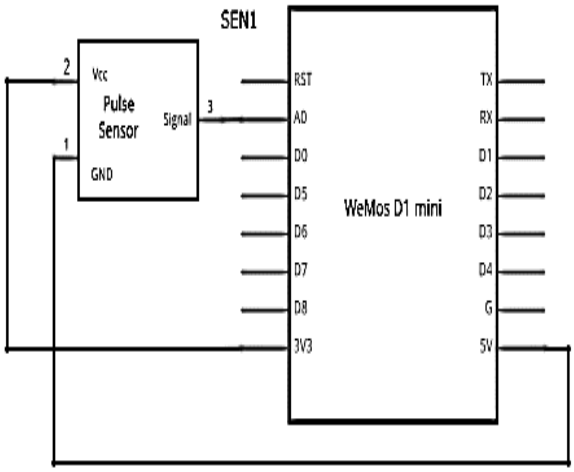

Figure 8 Pulse Sensor Testing Series

- Connected the series to the laptop to operate the sensor series with wemos as the microcontroller
- Tapping the right finger into the pulse sensor and left finger to the pulse oximeter at the same time
- Observed, logged, and analyzed each bpm change from the two sensors

c. Test Results and Analysis

This section explains the comparison from pulse sensor and pulse oximeter reading, then analyzed the error value from the overall data.

1) Normal condition testing

Normal condition testing means the respondents had not yet performed a heavy activity. Table 3 displays the comparison data between the pulse sensor (PS) and the pulse oximeter (PO) after five tests to ten respondents.

Table 3 Normal Condition Testing

No.	Name	Age	*Pulse Sensor*	*Pulse Oximeter*	Error (%)
1	Angga	19	83	82	1.21
2	Salwa	22	76	75	1.33
3	Dina	19	81	81	0
4	Wicak	23	85	84	1.19
5	Youngga	20	77	76	1.31
6	Guntur	21	91	90	1.11
7	Ardianto	22	69	69	0
8	Sulton	24	88	88	0
9	Bagus	23	84	84	0
10	Yuda	23	93	92	1.08
			Error rate		0.72

Dina, for example, has 82 bpm pulse sensor result from the serial monitor. Figure 9 and 10 show the display of her result.

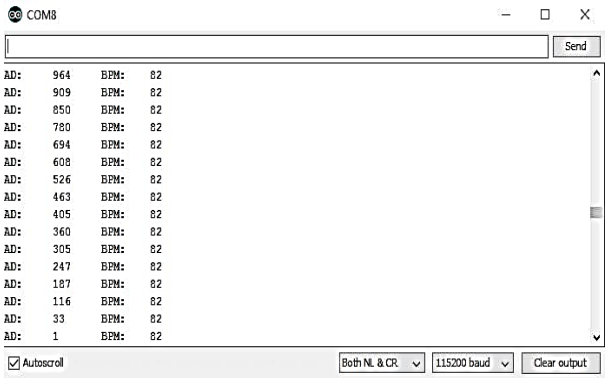

Figure 9 PS testing During Normal Condition

Figure 10 PO Condition During Normal Condition

2) Post-activity Testing

This test required the respondents' condition after heavy activity. Table 4 displays the comparison data between the pulse sensor (PS) and the pulse oximeter (PO) after five tests to ten respondents.

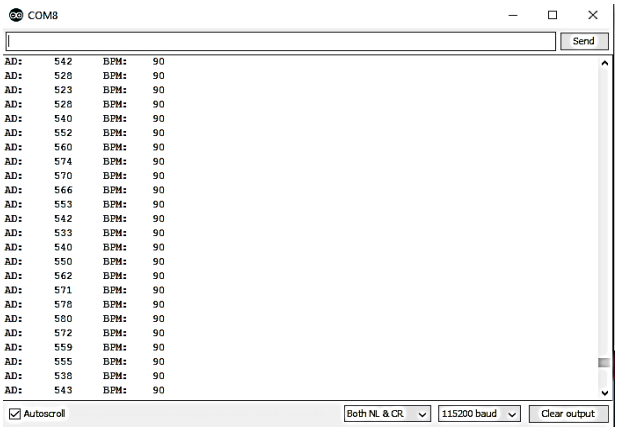

Figure 11 Post-activity PS Testing

Figure 12 shows the pulse oximeter testing result with the bpm value of 88.

Figure 12 Post-activity PO Testing

Based on the tests, the average error from the heart rate calculation in normal condition was 0.72%, with the highest error at 1.33% and the lowest at 0%. Meanwhile, the average error from the post-activity condition was 1.04%, with the highest error at 2.5% and the lowest at 0%. Equation 1 explains the error calculation.

$$\text{Error} = \frac{[\mathbf{PO}-\boldsymbol{PS}]}{\mathbf{PS}} x\ 100\% \quad (1)$$

with:

PO = *Pulse Oximeter* (*bpm*)

PS = *Pulse Sensor* (*bpm*)

The error that occurred from the pulse sensor reading could be a result by an external factor such as the finger position and pressure into the sensor. Finger position affected the sensor due to the inexact position of the finger. The light then unable to reflect from that made an inaccurate result. The pressure also affected the result because of the light unable to maximize the reflection that made an inaccurate result.

2. OLED Testing

This test aimed to find out whether the OLED can display the character and line as ordered.

a. Equipment required

Table 4 Post-activity Testing

No.	Name	Age	*Pulse Sensor*	*Pulse Oximeter*	Error (%)
1	Angga	19	85	84	1.17
2	Salwa	22	79	76	2.5
3	Dina	19	84	84	0
4	Wicak	23	89	88	1.12
5	Youngga	20	79	78	1.26
6	Guntur	21	94	93	1.06
7	Ardianto	22	72	72	0
8	Sulton	24	91	91	0
9	Bagus	23	86	85	1.16
10	Yuda	23	96	95	1.04
			Error rate		0.93

Dina, for example, has 90 bpm pulse sensor result from the serial monitor. Figure 11 shows the display of her result.

The equipment and materials required to test the pulse sensor were

- OLED 1pc
- Wemos D1 ESP8266 1pc
- Laptop or PC 1pc

b. Testing

- Connected the series as below

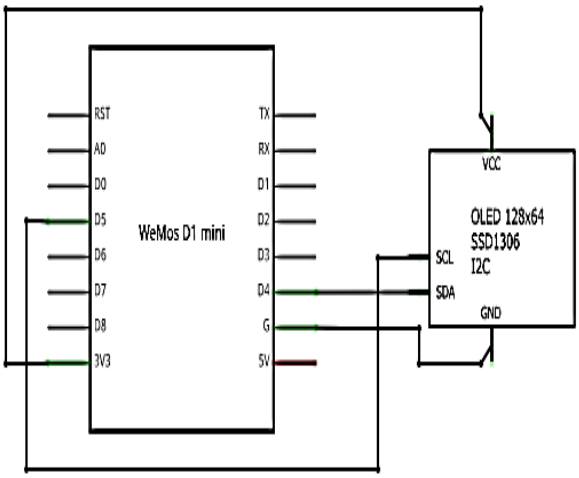

Figure 13 OLED Testing Series

- Connected the Wemos to the laptop or pc
- Observed the changes in OLED

c. Results and Analysis

Figure 14 displays the character and line results.

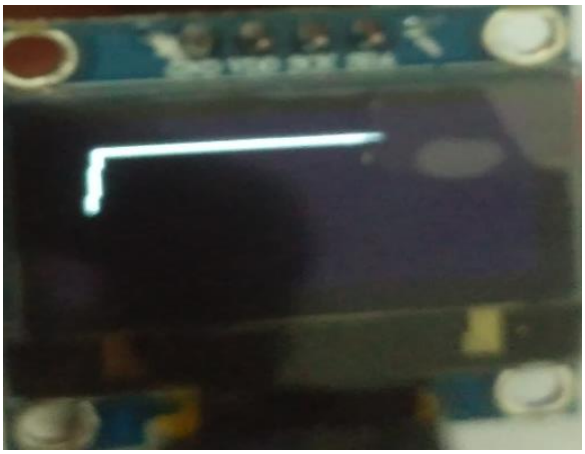

Figure 14 Line Display

figure 14 displays line results continuously due to no data from the sensor. In conclusion, OLED and program series worked well. Figure 5 shows the sensor during calculation activity.

Figure 15 Line Display During Calculation

3. Data Delivery Testing

This test aimed to find out how far Wemos able to send the data into *thingspeak* database.

a. Equipment required
- Wemos D1 ESP8266 1pc
- Access Point 1pc
- Android smartphone 1pc

b. Testing steps
- Made portable hotspot with Android smartphone as the access point
- Trial by distancing the access point
- Observed the changes in every distance (meter)

c. Results and Analysis

The results proved that Wemos could not send the data from more than 30 meters. Table 5 displays the results.

Table 5 Data Delivery Test without obstacle

No.	Distance to smartphone (m)	status
1	< 5	success
2	6 -10	success
3	11 – 15	success
4	15 – 20	success
5	21 – 25	success
6	26 – 30	success
7	30 >	fail

In conclusion, Wemos maximum range was 30 meters. The data could not be displayed if the distance was more than that.

B. Software Testing

This test aimed to find out whether the uCare application works in all Android software and whether the data displayed to correspond with the sensor reading.

1. Equipment Required

   Equipment and material required for pulse sensor testing were:
   - Android smartphone 10pcs
   - Pulse sensor 1pc
   - Wemos D1 ESP8266 1pc
2. Testing Steps
   - Installed the uCare application
   - Opened the uCare application
   - Logged in using email/google account
   - Turned on the device by sliding the switch from off to on
   - Tapped the finger to the pulse sensor
   - Observed and analyzed the changes
3. Results and Analysis

   The results showed that uCare worked in any Android type. Table 6 shows the testing data.

Table 6 Mobile app compatibility test

No.	Brand	Platform	status
1	Xiaomi Redmi 3	5.1.1	compatible
2	Asus Z 007	4.4.2	compatible
3	Xiaomi A4	4.4.4	compatible
4	Samsung J3	7.0	compatible
5	Asus ZE550KL	5.0.2	compatible
6	Oppo F5	7.1.1	compatible
7	Xiaomi S2	8.1	compatible
8	Asus Max Pro M1 ZB602KL	8.1	compatible
9	Sony Xperia Z5	5.1.1	compatible
10	Vivo V5S	6.0	compatible

Based on Table 6, uCare worked on any Android type, and that bpm displayed to correspond with the data sent by sensor reading to *thingspeak*. Figure 16 and 17 show the displays.

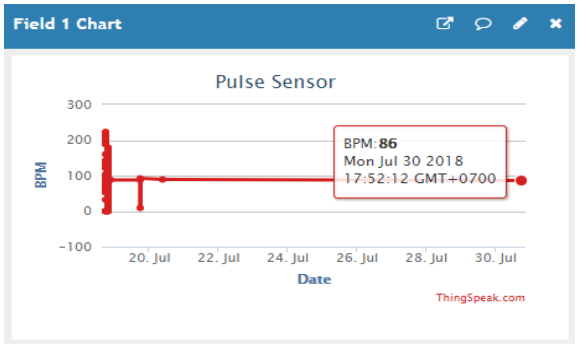

Figure 16 *Thingspeak* Display

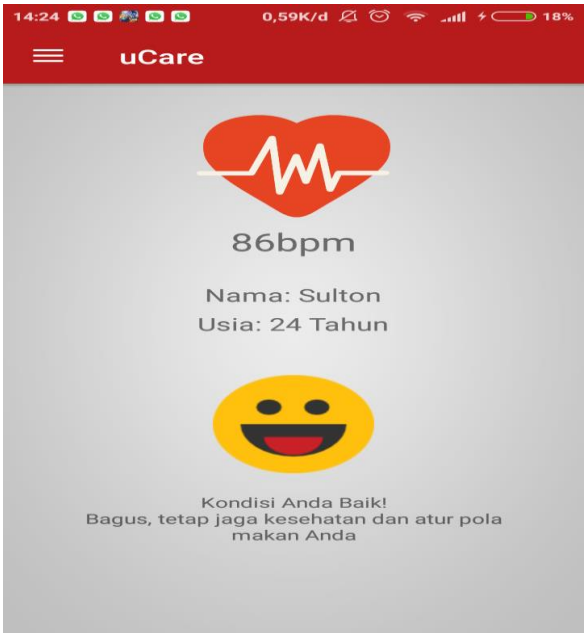

Figure 17 Android Display

Figure 16 and 17 show that the bpm value displayed on *thingspeak* correspond with the bpm value displayed on the uCare application. The data then stored in the firebase database after displayed. Figure 18 displays the history menu on the firebase database.

Figure 18 History Menu

V. CONCLUSIONS

Based on all steps and results conducted and based on all discussions and analysis of the device making process, this research concluded that:

This research used Wemos D1 ESP8266 as the microcontroller and also to communicate with the Android, pulse sensor as the heart rate detector, OLED as the signal displays from the pulse sensor, LM2596 to lower the battery voltage, and 9V battery as the power supply to all components.

When the finger tapped to the pulse sensor, the pulse sensor then detected the heart rate. The analog data then sent to Wemos and converted to digital and displayed in Android expressed in bpm.

The average IBI value was required to get high precision and accuracy. Each 10 IBI generated the average IBI, then stored in an array. This process required less than or equal to 10 seconds.

This research used two ways testing, normal and post-activity conditions. Normal condition testing generated 0.71 error value while post-activity testing generated 1.12 error value. This action also available to do at home due to its portable device and able to be used remotely with a maximum distance of 30 meters.

VI. ACKNOWLEDGMENT

We want to convey our deepest gratitude to all the parties who support this research particularly Ristek Dikti for providing the research fund under Penelitian Terapan Unggulan Perguruan Tinggi (PTUPT) research project 2018.

REFERENCES

[1] Zennifa Fadilla. 2014. Prototipe Alat Deteksi Dini Dan Mandiri Penyakit Jantung Menggunakan Sistem Pakar Vcirs, Wemos Dan Handphone Android, Jurnal Skripsi, Mahasiswa Teknik Elektro Universitas andalas Program Studi Telekomunikasi, Padang.

[2] Jalinas,dkk. 2016."Rancang Bangun Alat Pemonitor Detak Jantung Berbasis Koneksi WiFi". Universitas Gunadarma, Jakarta.

[3] Machriz Erliyanto, Sony Sumaryo, Achmad Rizal, 2008. Perancangan Perangkat Monitoring Denyut Jantung (Heart-Beat Monitoring) dengan Visualisasi LCD Grafik Berbasis ATMEL AT89C51, proseding Konferensi Nasional Sistem dan Informatika 2008; Bali.

[4] Novie Hediyani, 2012, Penyakit Jantung Koroner, http://www.dokterku-online.com/index.php/article/54-penyakit-jantung-koroner, diakses tgl 10 November 2017.

[5] Tanya Lewis, 2016, Human Heart: Anatomy, Function & Facts, http://www.livescience.com/34655-human-heart.html, diakses tgl 10 November 2017.

[6] Webster, EDS, 1981, Design of Microcomputer-Base Medical Instrumentation, Prentice Hall International, New Jersey.

[7] Anonymous, 2013, Top End Sports Resting Heart Rate Table. http://www.topendsports.com/testing/heart-rateresting-chart.htm/.

[8] M. Guler and S. Ertugrul, "Measuring and Transmitting Vital Body Signs Using MEMS Sensors," in RFID Eurasia, 2007 1st Annual, 2007, pp. 1-4.

[9] Bararah, Vera Farah. 2010, 29 Maret. Berapa Jumlah Denyut Jantung Normal. http://health.detik.com/read/2010/03/29/135029/1327738/766/berapa-jumlah-denyut-jantung-normal.

[10] Mokh. Sholihul Hadi, et al. 2018. Stand-alone data logger for solar panel energy system with RTC and SD card, Journal of Physics. Vol 1028.