Design and simulation of the microstrip antenna for 2.4 GHz HM remote control system

Deng Qun [1,a] ,Zhang Weiqiang [2,b] ,Jiang Jintao [3,c]

[1,2,3]Institute of Information Engineering &Technical, Ningbo University ,Ningbo, China

[a]qunqun_deng@163.com, [b]zhangweiqiang@nbu.edu.cn, [c]Jiangjintao@nbu.edu.cn

Keyworlds: HM remote control system; microstrip antenna; ADS

Abstract. Along with the development of the aviation industry, HM sports get more and more attention, it was a very hot sport at home and abroad, the remote control technology of model aircraft is also have been developed. In the present model aircraft remote control systems, the antenna is usually dipole antenna, dipole antenna is larger, higher power consumption . In view of the above shortcomings, this paper proposes a way that using micro-strip antenna instead of the traditional antenna. Through the discussion of the microstrip antenna's working principle, this paper designed a microstrip antenna works in 2.4 GHz model aircraft remote control system. According to its actual application , the material, shape, and the type of the microstrip antenna are determined, and the size of the antenna is calculated by the equation and the software , then the model of the antenna is built and simulated in ADS, finally the best parameters are obtained through optimizing and matching to meets the requirements.

Introduction

For a wireless model aircraft remote control communication system, it is a basic requirement to correctly send and receive data. Therefore, the antenna is an indispensable part of HM communication. But the used antenna now is too bulky for the HM remote controler. To solve this problem, the paper choose to use a microstrip antenna to instead the triditional antenna,it can not only reduce the volume of the wireless transmission equipment, but also reduce power consumption and costs [1]. The HM remote control system using CYWM6936 RF chip to build the wireless transmission module,and using spread spectrum communication techniques for transmitting data, so this article completed the microstrip antenna design of 2. 4 GHz spread spectrum communication system based on CY6936 chip,laid the foundation so as to constitute a small volume, low-power model aircraft remote control system hardware [2].The following detailed discusse the microstrip antenna design principles, the design process as well as impedance matching program.

Principles of microstrip antenna design

Radiation principle of microstrip antenna. Microstrip antenna is a microwave antenna which consisting of desired shape metal ground conductor patches or attached to the floor of the dielectric substrate, typically by a microstrip transmission line or a coaxial probe fed, so that between the conductor patches and the ground plate excite high-frequency electromagnetic fields, and electromagnetic waves radiate outward through the gap between the patch around the ground plate [2,3].

Published by Atlantis Press, Paris, France.

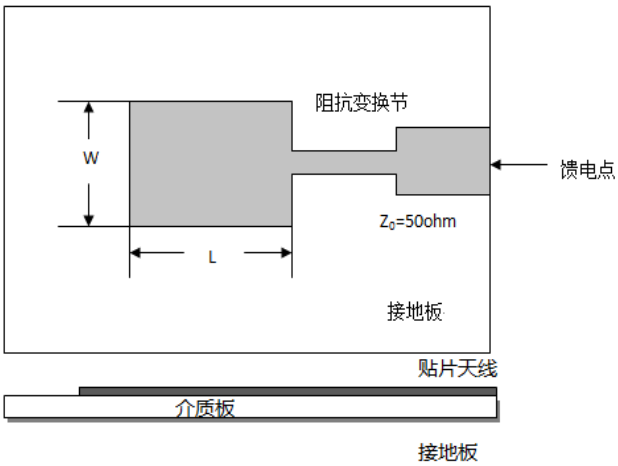

Fig. 1 Rectangular microstrip patch antenna structure

Choice of the antenna shape. SMD has variety of shapes, circular microstrip antenna's beamwidth is narrower than rectangular microstrip antenna,but their directional coefficient almost identical ,and the rectangular microstrip antenna required a more big area for radiating than circular microstrip antenna .At the same time,we can caculate that the desired size of rectangular patch in the range can meet the requirements, and also the efficiency and the width of rectangular microstrip antenna are superior to the circular microstrip antenna [4]. The rectangular microstrip antenna structure diagram is shown on Fig.1.

Antenna feeding electric mode selection. The microstrip antenna has many kinds of feed ways, but mainly divided into microstrip transmission line feed and coaxial probe feed [5]. Where in the microstrip transmission line feed is a conductor strip, typically having a narrower width. Microstrip transmission line feed is simple to manufacture, easy to match, and also easy modeling. Coaxial probe feed by connecting coaxial inner conductor to the radiating patch, and the outer conductor received a ground plane. The coaxial feeder also has the advantage of manufacturing simple, easy to match, while a relatively narrow bandwidth, but the modeling is relatively difficult [6].

Design process

Antenna size calculation . To determine the size of the rectangular patch, i.e. the length and the width[7].

Width calculation. Width affects the directivity function of the microstrip antenna, the radiation resistance, and the input impedance, which also affects the bandwidth and the radiation efficiency.In addition, it controls the total size of the microstrip antenna.Take an appropriate consideration of the installation conditions , a larger W is beneficial to the band ,efficiency, and the impedance matching ,but when the size greater than the value that formula (1) gives, it will be generate a high-order mode, causing the distortion of the field.

$$W \le \frac{C}{2f_r}\left(\frac{\varepsilon_r}{2}\right)^{-1/2} \tag{1}$$

C is the speed of light;□r is the dielectric constant ;f_r is the resonance frequency.

length calculation The length of a rectangular microstrip antenna is the half of the value of its wavelength in theory, but taking the influence of the fringe field into account , it should be subtracted 2 △ L, L can be calculated by formula (2) .

$$L=\frac{\lambda_g}{2}-2\Delta L \tag{2}$$

In the formula (2) ,λ_g is the corresponding wavelength of f_r ; △ L is actually a correction value influenced by the fringe field , respectively, calculated by the formula (3) to (5). □e is the correction

constants.

$$\lambda_g = \frac{C}{f_r \sqrt{\varepsilon_e}} \tag{3}$$

$$\varepsilon_e = \frac{\varepsilon_r + 1}{2} + \frac{\varepsilon_r - 1}{2}\left(1 + 12\frac{h}{W}\right) \tag{4}$$

$$\Delta L = 0.412h\frac{(\varepsilon_e + 0.3)(W/h + 0.264)}{(\varepsilon_e - 0.258)(W/h + 0.8)} \tag{5}$$

In this design, with the FR4 dielectric substrate (Er = 4.4, tan δ = 0.02 and h = 1.6mm), f = 2.4GHz, the relative bandwidth greater than 1%. According to the above formulas,the length and width(L = 3cm. W=2.5mm) can be obtained.The way of feed is microstrip feed.

Simulation

Build the model and simulate in ADS [8]. The results are shown below:

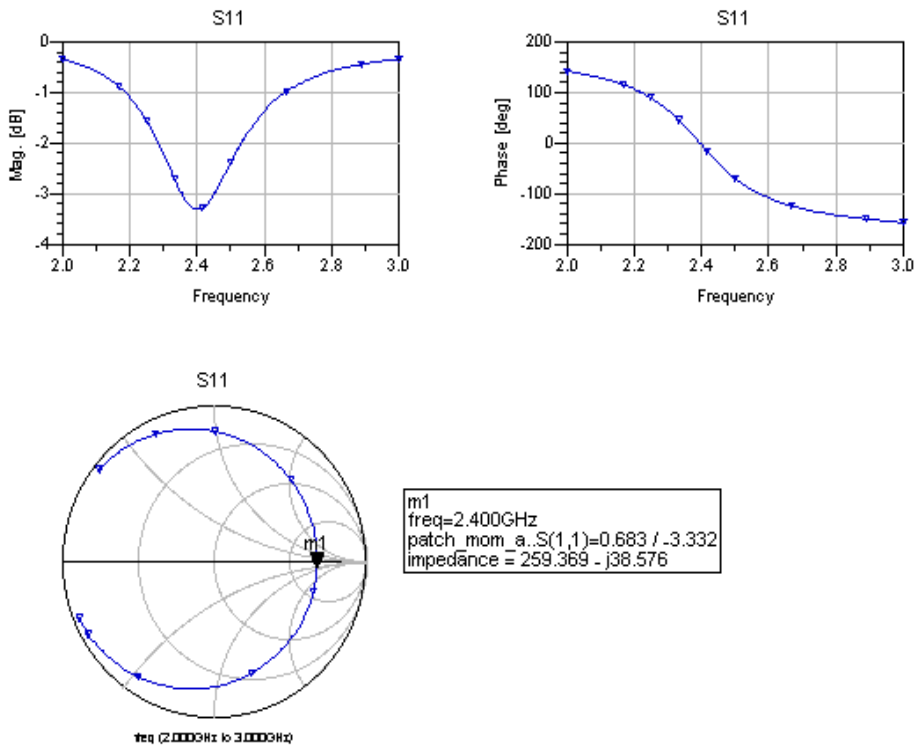

Fig. 2 S-parameter simulation results of the first antenna

As can be seen from the figure.2, theoretical calculation result is consistent with the actual center frequency of approximately 2.4 GHz.

Optimization

In order to further reduced the reflection coefficient, and to achieve the desired match, even to make the center frequency more accurately, need impedance matching of the antenna. The impedance matching is a very important aspect of RF circuit design, we can see from the image above, the input impedance is 259.369-j * 38.576, not equal with 50 ohm (the transmission line impedance),so it is necessary to add a matching circuit to increase the characteristic impedance of the antenna patch , in order to achieve the maximum power transmission [9,10].The methods of impedance matching including capacitance inductance method and microstrip line method , because of the higher frequency ,so we select microstrip line matching method in this design. Using ADS tool-- smith chart ,matching can be obtained easily,it need to add a characteristic impedance of 116

ohm microstrip line to achieve the antenna input impedance to a 50-ohm matching; while using ADS LinCalc tool can calculate the width and length of the microstrip line, the calculation process and the final results are that the match line of length is 17.1mm, the width is 0.45mm, the 50 ohm microstrip feed liner can be set arbitrary length, the final matching schematic as follows.

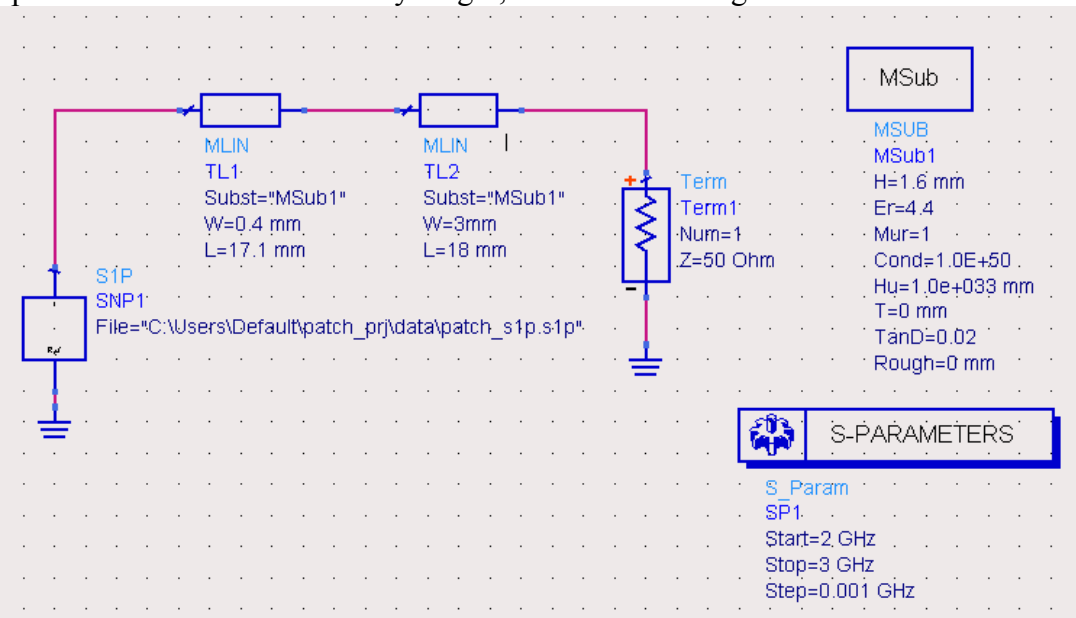

Fig. 3 Optimized circuit schematics

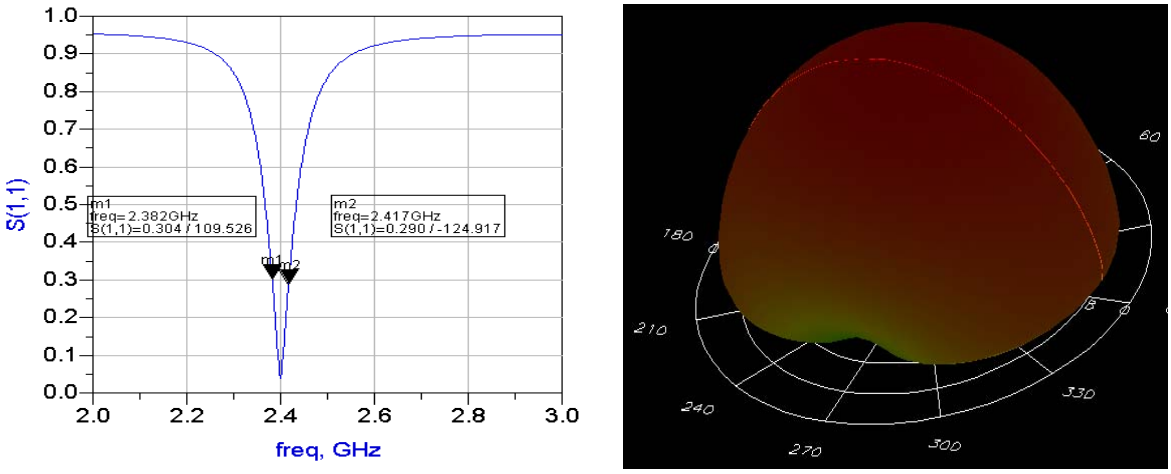

Fig. 4 The simulation results after optimization

The simulation after optimization is shown on fig.4 , it can be seen that the antenna operates in the frequency 2.44GHz, the radiation characteristics, the main radiation direction perpendicular to the antenna surface,can well meet the practical application of the HM control system.

Summary

This paper describles the design principles and processes of microstrip antenna, calculates the size according to the classic formula of rectangular microstrip antenna, Modeling and simulating by the ADS simulation software, through continuous adjustment of the antenna's performance, so as to achieve the most optimized and designed performance that can well meet the requirements of the practical application.

References

[1] Yin Jijie .Microwave antenna . Beijing: Electronic Industry Press, 2004.

[2] Song Zheng, Zhang Jianhua, Huang Zhi.Antenna and Propagation. Xi'an: Xi'an Electronic Science and Technology University Press, 2002.

[3] Huang Qiuyuan, Dong Shibo, RF circuit matching network design and analysis. Wuhan University of Technology: Transportation Science and Engineering, 2007,31 (6): 1061-1063.

[4] Yang Yongxia, Yang Lin. 2.4GHZ microstrip antenna design Based on CC2430. The Electronic Technology .2011.24 (9): 34-41.

[5] Jia Peng, Huang Xiping, Gao Hongming. Design and Implementation of 2.4GHZ microstrip antenna for RFID applications . Electronic products world .2010.

[6] Li Yan. Rectangular microstrip patch antenna simulation study and design. Wuhan: Wuhan University of Technology, 2011.

[7] Zhang Jian. Rectangular microstrip patch antenna (MPA) principles and EDA design. Integrated circuit communication, 2008, 26 (3) 31-37.

[8] Xu Xingfu .The RF circuit design and simulation by ADS2008 .Beijing: Electronic Industry Press, 2009.

[9] Yang Hanhua. RFID fractal antenna design and research in Mine field.Zhenjiang: Jiangsu University, 2008.

[10] Chen Yongliang.Preliminary design and optimization of the linear array of rectangular microstrip patch antenna .Chengdu: Southwest Jiaotong University, 2005.

Published by Atlantis Press, Paris, France.