Application of Bacterial Foraging Optimization PID Control in VAV System

Chen Li
Shandong Normal University
School of Information Science & Engineering
JiNan China
chli@163.com

***Abstract*—Considering the control characteristics of the variable air volume air-conditioning system, this paper presents the optimized PID control strategy based on bacterial foraging optimization, and applies it to the optimal adjustment of PID parameters of VAV air conditioning control system. Compared with the traditional PID control, the new PID control strategy improves the performance of the system by digital simulation in the circumstances of MATLAB/Simulink.**

Keywords- BFO algorithm; variable air volume(VAV); PID control; system simulation

I. INTRODUCTION

VAV(Variable Air Volume) air-conditional system is one of the most popular and energy-efficient air-conditioning systems which are applied to the current commercial buildings. It can automatically adjust the air volume into the room of the air conditioning system in accordance with the change of the load and the change of the indoor air parameters, in order to meet the requirements of the indoor comfort or production process. The adjusted air volume can minimize the fan-power and thus save the energy consumption [1]. The VAV air conditioning system is a complex system because it needs to complete the match control of room temperature, humidity, fresh air, and air volume. Based on the traditional PID algorithm-DDC controls, the end of VAV control method leads to lengthened adjustment, longer lag and ineffective control. Paper [2] demonstrates a PID control method based on the fuzzy control technology and paper [3] studies the simulation of PID control method based on ant colony algorithm and paper [4] uses PSO algorithm to improve the PID control parameters in order to achieve better energy-saving effect. Bacterial foraging Optimization (BFO) Algorithm is a new bionic intelligent optimization algorithm in recent years. With the characteristic of simple algorithm, faster convergence, less demand of priori knowledge, the BFO algorithm is more and more widely used in controlled areas. This paper presents the optimized PID control strategy based on bacterial foraging optimization, applies it to the optimal adjustment of PID parameters of VAV air conditioning control system and gives the result of simulation.

II. THE BFO ALGORITHM

The Bacterial Foraging Optimization (BFO) algorithm was introduced by Kevin M. Passino in 2002 [5], which derived from the research of bacterial group especially E.coli group foraging behavior. At the beginning of algorithm, a set of random solutions will be produced as the initial position of each bacterium, and then, the foraging behavior of E.coli is divided into four steps, chemotaxis, Swarming, Reproduction and Elimination-Dispersal to simulate the behavior of bacterial group. A healthy degree function is used to measure the bacterial foraging, by selecting the bacteria with good foraging effect to breed and eliminating the bacteria with bad effect, the individual which has lower fitness value in the solution space is removed. At last, the bacterial group migrates to the new foraging area by a certain probability, which reduces the probability of converging to a local optimum and improves the probability to find the optimal solution [6].

A. Four Foraging Behavior of Bacterial Groups

1) Chemotaxis

Since bacteria often survive in the chemical attractant environment, the chemotaxis is their stress-response to the environment. In this process, the bacterium alternates between tumbling (changing direction) and swimming behaviors. Here, swim is indicated as movement in the same direction as the previous step, tumble is choosing a new random direction to move. After one step move, the new position of the *i*th bacterium can be represented as $\theta^i(j+1,k,l)$

$$\theta^i(j+1,k,l)=\theta^i(j,k,l)+C(i)\phi(j)$$

$\phi(j)$ is a unit length of the random direction vector, and $C(i)>0$ is the chemotactic step size of *i*th bacterium.

2) Swarming

In the bacterial group foraging process, the bacterium achieves collective assembly behavior through inter-role (attraction and repulsion). The functions is

$$J_{cc}(\theta)=\sum_{i=1}^{S}J_c^i=\sum_{i=1}^{S}\left[-d_{att}\exp\left(-w_{att}\sum_{j=1}^{D}(\theta_j-\theta_j^i)^2\right)\right]$$

$$+\sum_{i=1}^{S}\left[h_{rep}\exp\left(-w_{rep}\sum_{j=1}^{D}(\theta_j-\theta_j^i)^2\right)\right]$$

Where, d_{att} is the depth of the attractant released by the bacterium, w_{att} is the width of the attractant signal, h_{rep} is

the height of the repellant effect magnitude, which is same as the depth of the attractant, and w_{rep} is the width of the repellant signal.

3) Reproduction

Each healthier bacterium with good foraging result split into two bacteria, which are then placed in the same location as their parent. To keep the number of bacterial group unchanged, the bacteria that do not split will die.

4) Elimination-Dispersal

In elimination-dispersal, individual bacterium is stochastically selected for elimination from the group and is replaced by a new bacterium located at a random new location within the optimization domain, according to a preset probability. The bacterium is dispersed to a new area, which destroys the chemotaxis, but the bacteria may find the more abundant areas. This mimics the real-world process of the bacteria can be dispersed to new location.

B. Algorithm flow

1) Initialization
2) E=1(Elimination-Dispersal steps)
3) R=1(Reproducion steps)
4) C=1(Chemotaxis steps)
5) Generate a random vector to move,and get a new location θ^{new} [7]
6) Calculate new fitness, Jsw^{new}
7) M=1(swimming steps)
8) If $J_{sw}^{new} < J_{sw}^{i}$ *,continue move in this direction, recalculate* θ^{new} *and* Jsw^{new}*,m=m+1;else go 10)*
9) If M<=N_S*(Maximum step of swimming) go 8)*
10) C=C+1
11) If C<=Nc(Maximum step of chemotaxis) go5)
12) Reproduction
13) R=R+1
14) If R<=Nre(Maximum step of reproduction) go 4)
15) Elimination-dispersal
16) E=E+1
17) If E<=Eed(Maximum step of elimination) go 3)
18) End

III. DATA ANALYSIS OF VAV AIR-CONDITIONED ROOM

For the sake of analysis, the charged room is looked as a single-capacity object, neglect its lag. According to the law of conservation of energy, the energy outflow of the thermostatic chamber per unit time subtracted by the energy into the thermostatic chamber per unit time is equal to the rate of change of the energy accumulator in a thermostatic chamber[8].

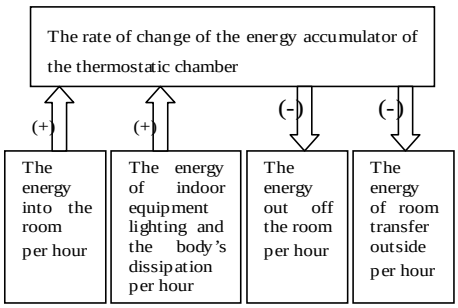

Figure 1. the heat storage capacity of single room indoor

The energy relationship of air-conditioned room can be represented by function:

$$C_1 \frac{dt_n}{dt} = (L\rho c t_s + q_n) - \left(L\rho c t_n + \frac{t_n - t_0}{r} \right)$$

Where L is the air supply, ρ is the air density, c is the isobaric heat capacity of air, C1 is the capacity factor of a room, t is the time, q_n is the indoor heat dissipation, t_0 is the air temperature outdoor, t_n is the air temperature indoor, t_S is supply air temperature, r is the thermal resistance of room maintenance institutions[9].

Air volume L is made as input, and the room air temperature as output, the function get the recognized adjust channel transfer function by Laplace transform is as follows:

$$G_1(s) = \frac{k_1}{T_1 s + 1}$$

The interference channel transfer function is expressed as follows:

$$G_2(s) = \frac{k_2}{T_2 s + 1}$$

The transfer function of air valve is expressed as follows:

$$G_3(s) = \frac{k_3}{T_3 s + 1}$$

The temperature detection and transmission can be approximated instead by the proportion, and its transfer function is expressed as follows:

$$G_4(s) = k_4$$

IV. THE CONTROL MODE

A. PID Control Mode

PID (Proportional-Integral-Derivative) controller make P(proportional) I(Integral) and D(derivative) constitute a control amount by linear combination, to control the object[10]. Because of its simple structure, easy to implement, high reliability, good stability, PID controller

bas been widely used in the industrial processes. But to nonlinear system and fuzzy model system, it cannot get good control effect as expected [3].

B. PID Control Mode Base on BFO

As a disturbed, nonlinear and indeterminate system, VAV uses traditional PID control to make a poor effect [9]. BFO algorithm has the characteristic of simple algorithm, faster convergence, required less priori knowledge, and is more and more used in controlled areas. The PID controller based on BFO algorithm combines the BFO with PID control.

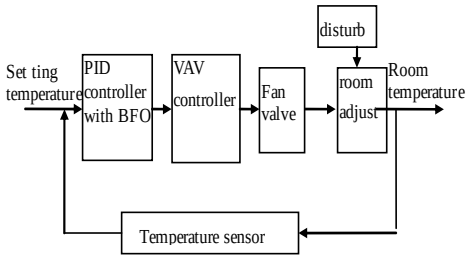

Figure 2. the air-conditioning PID control system based on BFO

V. SYSTEM SIMULATION

Let initial temperature interior is 0°C, the setting temperature interior is 10°C, the parameters of object are: T1=3，T2=3，T3=20，k1=0.8，k2=0.1，k3=0.15，k4=1, and the initial PID parameters of controller are: kp=2，ki=1，kd=0.5.

A. the mathematical model and simulation of traditional PID control system

The simulated model of VAV PID control is expressed as follows:

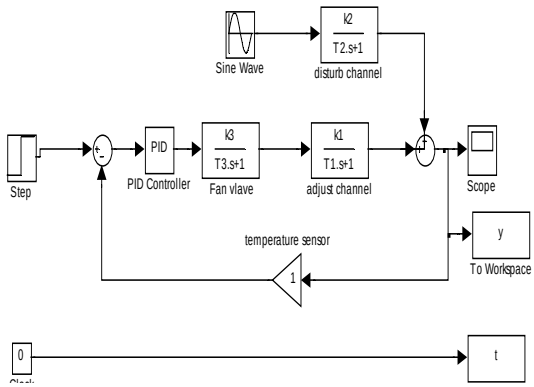

Figure 3. the simulated model of traditional PID control system

In accordance with the foregoing assumes, let the amplitude of the reference input step signal is 0.1. After digital simulated in the circumstance of MATLAB/Simulink, the step response-the process of change in room temperature is shown in figure 4.

B. the mathematical model and simulation of PID control system based on BFO

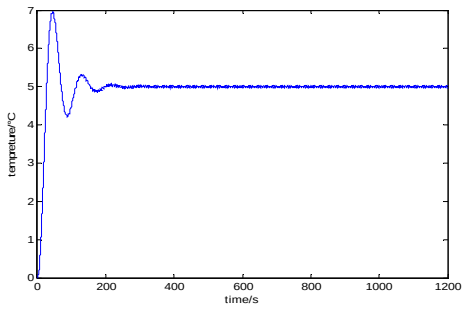

Figure 4. the step response of traditional PID

1) Model Design

The PID parameters are optimized by BFO algorithm. The PID controller consists of two parts [11]: One is the classic PID controller direct closed-loop control of the controlled object; the other is the BFO algorithm online tune the three adjustable parameters Kp, Ki, Kd of PID based on the operational status of the system, look for a set of parameter values to make the control system in the rapid response and meet the small overshoot and have a short transition time, as shown in figure 5.

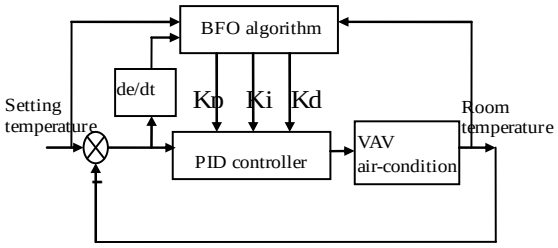

Figure 5. the PID controller based on BFO

2) the optimization index of PID controller

Common PID controller optimized index are IE(Integrated Error), IAE(Integrated Absolute Error), ITAE(Integral of Time and Absolute Error), ISE(Integral Square Error), ITSE(Integral of Time-weighted Squared Error), and so on[12]. The article uses the ITAE as the PID controller optimized index.

3) the realization of PID controller based on BFO

Suppose the optimization space is 3_dimensional, the scale of bacterial group is 50, then initialize the location of *i*th bacterium in group by random, which includes the value of kp, ki, kd of PID. Set the upper and lower limits of PID parameters are [0, 30]. Calculate the fitness of each bacterium-the ITAE, the fitness function is expressed as follows, where e(t) is the error value.

$$J_{sw} = \int_0^t t|e(t)|dt$$

BFO algorithm finds the optimal PID parameters. After digital simulated in the circumstance of MATLAB/Simulink, the step response-the process of change in room temperature is shown in figure 6.

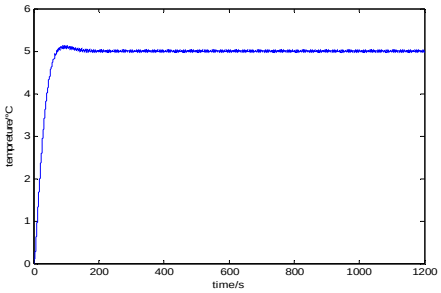

Figure 6. The step response of PID controller based on BFO

VI. CONCLUSION

From the simulation results, the PID controller system based on BFO has smaller overshoot and shorter adjusted time, which achieve the purpose of energy conservation and improve the dynamic performance of the traditional PID controller. In future research, we will take into account the sensing lag of VAV air-conditioning, in order to have a better simulation results to make the system better applicable and more energy-efficient.

ACKNOWLEDGMENT

I would like to express my gratitude to all those who have helped me during the writing of this paper. This research was supported by Shandong Province Science and Technology Development Project. (No. 2010GGX10106)

REFERENCES

[1] Liu Jingwan. “Vav air-conditioning fuzzy control technology and applications” China Architecture & Building Press. October. 2011

[2] Cao Jianqiu, Xu Kai. “Variable Universe Self-adaptive Fuzzy PID Control Applied in the VAV Air-conditioning Systems”. Computer Simulation,vol 28, May. 2011, pp. 197-200

[3] Pan Jigang, Yu Bo, Deng Wanquan. “Simulation of VAV Air Conditioning Control Based on Ant Colony Algorithm”. Journal of Xihua University,vol 30, May. 2011, pp.86-88

[4] Ma Shaohua, Meng Fanqing, Sun Huaze. “Improve Particle Swarm Optimization Algorithm PID Control Applied at the End of VAV Air-conditioning System Based on PSO”. Journal of Shenyang Jianzhu University, vol 26, May.2010, pp.592-598.

[5] Kevin M. Passino. “Biomimicy of bacterial foraging for distributed optimization and control”. IEEE Control Systems Magazine, vol 22, March.2002,pp.52-67

[6] Fan Feizhi. “the Research and improve of BFO algorithm”. North China Electric Power University, master's degree thesis. 2010.

[7] Jing Dang .Anthony Brabazon .Michael O’Neil. David Edelman “Option Model Calibration Using a Bacterial Foraging Optimization Algorithm”. EvoWorkshops 2008,LNCS 4974,pp.113-122

[8] Wang Jianming, Li Xunming. “Modeling and Estimating of the Characteristic Parameters for the Air Conditioning Room of the VAV System”. Computer Simulation, vol 19, July. 2002, pp.69-72

[9] Wang Su, Zhao Xunwei. “Modeling and Simulation of VAV Air Conditioning System Based on MATLAB”. Journal of Hubei University of Technology,vol 24,October.2009, pp.31-33

[10] Liu Jingkun. “MATLAB simulation of Advanced PID Control”. Publishing House of Electronics Industry,March. 2011.

[11] Zhang Yi, Zuo Weiheng, LinTao. “Application of BP Neural Network PID Control in Air-Conditioning System”. Computer Simulation,vol 28,November.2011, pp.149-151

[12] Dong Hwa Kim. “Robust Tuning of Embedded Intelligent PID Controller for Induction Motor Using Bacterial Foraging Based Optimization “. ICESS 2004 ,pp.137-142