ATLANTIS PRESS
Advances in Engineering Research, volume 154
International Conference on Mechanical, Electrical, Electronic Engineering & Science (MEEES 2018)

An Intelligent Control Strategy of Wedge in Hot Rolled Strip

Changli Zhang*, Bo Gong, Ce Wang, Ziying Liu
Shougang Research Institute of Technology, Beijing 100043, China.
* zhangchangli@shougang.com.cn

Keywords: Wedge, hot rolled strip, intelligent control.

Abstract. An intelligent control strategy of strip wedge in hot rolled strip has been presented in this paper, which includes a wedge adaption method, a roll gap leveling adjustments in level2 system and a dynamic wedge control in level1 system. A test application manifests that a good expected wedge quality of hot rolled strip can be achieved, which results in more steady and small amplitude of wedge in the whole strip range.

1. Introduction

The hot strip section wedge at the outlet of hot continuous mill is one of key shape factors, and often be defined as the thickness deviation at two side locations, often 25mm or 40mm away from operator and drive most edges. The formation of hot strip wedge at the delivery exit of tandem mill, from the recent studies, often comes from the following factors: the difference of mill stiffness, rolling deviation, incoming wedge, temperature difference, etc. [1-3]. The defects of large hot strip section wedge will be proportionally inherited to the downstream cold rolling process, especially for the base products for cold rolling, severely affecting the production quality, such as a serious unsymmetrical plate shape of unilateral side waves, the running deviation during continuous annealing unit or galvanizing line, which leads to the rate-limiting or strip break.

Although these quality concerns, there were rarely special strip wedge auto-control functions, in Level2 and Level1 systems, that had been equipped or taken into practice for the hot strip mills. The most reasons account for these phenomena are that operator roll gap leveling adjusts are more effective in case of non-steady rolling situation, such as threading, delivery and unilateral waves, other than enabling auto strip wedge control. Whereas, auto strip wedge control should be developed and equipped in shape control systems and take into practice. Here, an intelligent strip wedge control strategy is introduced, which has been developed and integrated into Level2 shape model and Level1 basic automation level.

2. Control Strategy

Most shape control system deals with the symmetric part of strip transverse section, namely the thickness profile. As for the asymmetric part of strip transverse section, it is important to control the strip wedge. For shape control system, two controlling levels are covered, which are shape setup model and dynamic wedge control model. Generally, shape setup models are in Level2 system, and the dynamic wedge control can be optionally integrated into Level2 or Level1 systems. An intelligent control strategy of strip wedge control presented here is designed to minimize the thickness wedge on the current coil through coordinated differential roll gap position dynamic changes according to the detected feedback wedges from gauge meter, and on the next coil through wedge adaption and pre-setup technologies. The schematic principles are shown in Figure 1.

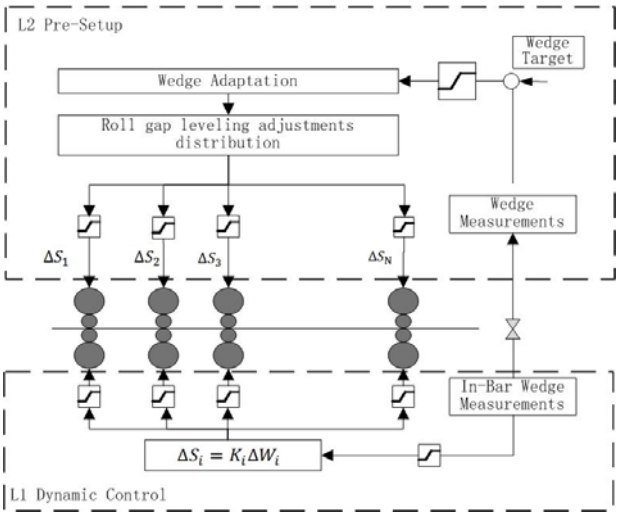

Figure 1. The control strategy principles of strip wedge in hot rolling mill, including Level2 pre-setup and Level1 dynamic control systems.

2.1 Wedge Adjustments Distribution.

With regarding to the control of the strip symmetrical thickness profile, the shape mechanical actuators of roll shift and roll bend for each mill stand are often calculated in some shape models to meet the requirements of the target flatness and profile. The basic principle on how to distribute the total profile changes from incoming slab profile to the delivery target profile must follow the basic buckling limits of each strip section in mill stands. Following the same principle, the wedge roll gap leveling adjustments for each stand are distributed with consideration of unilateral wave limits and it maximal adjustment capability.

The setup value of initial gap leveling is required to be calculated in shape setup systems and is sent to FM setup for roll gap leveling adjustments. The wedge control correction is calculated to remove the wedge to the degree permitted by buckling considerations.

$$\Delta W_{\mathrm{L}i} = k\frac{E_i}{1+v}\left(\frac{h_i}{w_i}\right)^2 \tag{1}$$

where $\Delta W_{\mathrm{L}i}$ indicates the buckling limits, it is the stand number, k is a buckling critical stress relative coefficient, E is the elastic modulus, v is Poisson's ratio, h and ware respectively the strip thickness and the strip width at the specified stand exit.

The total buckling limit summation is calculated by

$$\Delta W_{\mathrm{L}}^{\mathrm{T}} = \sum_{i=1}^{N}(C_i \Delta W_{\mathrm{L}i}) \tag{2}$$

Where C_i is the user modifier, which can affect the redistribution of wedge total adjustments among mill stands?

Thus, the wedge gap leveling adjustment ΔS_i for stand it can be calculated by

$$\Delta S_i = \frac{\Delta W_{\mathrm{L}i}}{\Delta W_{\mathrm{L}}^{\mathrm{T}}}(\Delta S^{\mathrm{T}}) \tag{3}$$

Where ΔS^{T} denotes the total expected roll, gap leveling adjustments that comes from the wedge adaption $\mathrm{z_w}$ based on a linear extrapolation hypothesis. The correlation between ΔS^{T} and $\mathrm{z_w}$ is expressed by

$$\Delta S^{\mathrm{T}} = \frac{L_{\mathrm{CYL}}}{(\mathrm{B}-2L_{\mathrm{WEDG}})}\mathrm{z_w} \tag{4}$$

Formula (3) expresses the roll gap leveling adjustments distribution among the stands. In practice, the final roll gap leveling adjustment indicated in Formula (3) are necessary clamped by a given safety top-bottom limitations. Another user tuner coefficients Ci in Formula (2) incorporate the operator intentional distributions.

2.2 Wedge Adaption.

In order to minimize the wedge of next coil at FM delivery exit, an adaption based on the measured wedge has to be applied. The thickness wedge adaption calculation will determine the desired control profile wedge changes that will be introduced and redistributed via the shape setup system. The actual

wedge measured by an FM delivery profile gauge, noted byW_{m}, is defined as the thickness difference between locations 40mm away from the operator side and drive side.

According to the target wedge valueW_{t}, often zero, the wedge Adaption to the adjustments can be expressed as:

$$\mathrm{Z}_{\mathrm{w}}^{\mathrm{new}} = \mathrm{Z}_{\mathrm{w}}^{\mathrm{old}} + \beta(W_{\mathrm{m}} - W_{\mathrm{t}}) \tag{5}$$

Where β IA a relaxation coefficient for the difference of the measured and target wedge values, $\mathrm{Z}_{\mathrm{w}}^{\mathrm{old}}$ is the adaption value that is retrieved from database and used for roll gap in pre-setup calculation, $\mathrm{Z}_{\mathrm{w}}^{\mathrm{new}}$ is the new adapted value.

Data gathering part for W_{m} can be a strip section after coiler picking up, other than the very head part of strip by considering the controlling steady.

2.3 Wedge Dynamic Control.

The in-bar control of the strip wedge is required in mill level 1 to ensure that the desired changes in mill level are achieved. The feedback control for real time roll gap leveling adjustment can be conducted by the following transfer coefficient, K_i , that transfer the measured wedge changes (calculated by the distribution method mentioned above) to the gap leveling adjustments.

$$K_i = \frac{\partial(\Delta S_i)}{\partial(\Delta W_i)} = \frac{L_{\mathrm{CYL}}}{(B-2L_{\mathrm{WEDG}})}\frac{M_i+Q_i}{M_i} \tag{6}$$

where L_{CYL} is the distance between operator side and drive side gap cylinders, B is the strip width, L_{WEDG} the specified edge distance for wedge definition location (generally 40mm is specified), M is mill modulus, Q is the strip plasticity coefficient.

3. Application Results

The control strategy of strip wedge has been tested and applied into a hot rolling mill line, and Figure 2 shows the effect comparison of wedge control before and after the application of the mentioned strategy above. As it shows that the wedge value in the head and body part varies obviously over the amplitude of 20 micrometer without application of intelligent wedge control, whereas the amplitude decreases to almost 10 micrometers with application of auto wedge control.

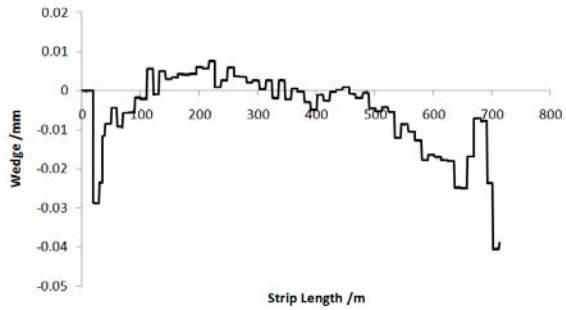

(a)

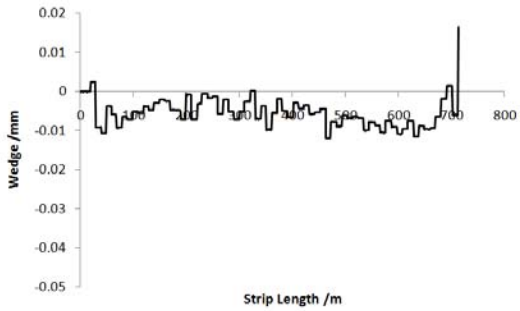

(b)

Figure 2. Comparison of hot rolled strip wedge between before (a) and after (b) the test application of wedge control strategy.

Although the strategy described above can increase the wedge quality of hot rolled strip to a better degree, there are still further problems to be solved, such as strip running deviation or unilateral waves, which restricts the full application in thin gauge strip production and promotes the operator manual intervention of roll gap leveling.

4. Conclusion

An intelligent control strategy of wedge in hot rolled strip has been presented in this paper, which includes a wedge adaption method and a roll gap leveling adjustments in level2 system and a dynamic wedge control in level1 system. A test application manifests that a good expected wedge quality of hot rolled strip can be achieved, which results in more steady and small amplitude of wedge in the whole strip range.

References

[1]. Liu Winching, Lu Shimon and Chen Yulee, Strip Wedge Control for Hot Strip Mill, Journal of University of Science and Technology Beijing 24, 288-290(2002).

[2]. Zhang Yan, Yang Quant, HE Anhui, et al. Analysis and Control of Strip Wedge in 2250 Conventional Continuous Hot Rolling, Iron and Steel 47, 43-47(2012).

[3]. Chen Hiring, Wang Qi. A Dynamic Wedge Control Solution in Conventional Continuous Hot Rolling Mill, Steel Rolling 32, 12-14(2015).