Advances in Intelligent Systems Research, volume 154
6th International Conference on Measurement, Instrumentation and Automation (ICMIA 2017)

Further Discussion on Measurement of Liquid Surface Tension Coefficient by pulling escape method

Hanyu Qin[1,a] , Xuesong Leng[1,b], Yunju Chang[1,c] , Guowan Mu[1,d], Shibo Wang[1,e] and Fan Shi[1,f]

[1] The University of Science and Technology Liaoning, Anshan City, Liaoning, 114051, China

[a]ytbmzl@163.com,[b]lengxuesong1234@163.com,{[c]gtdrxs,[d]hrxyccc,[e]hexyccc,[f]gtdrcl}@163.com

Keywords: liquid surface tension; pulling escape; force analysis; mathematical discussion.

Abstract. In this paper, we measured liquid surface tension coefficient of the 20 degrees' pure water by FD-NST-I liquid surface tension coefficient measuring instrument, and made further discussion of when to read the number of digital voltmeter. We divided the pulling escape process of ring leaving liquid membrane into five stages, researched on the force analysis of the metal ring and the change of digital voltmeter of each stage, and discussed mathematically of the pulling escape process of liquid membrane by contrasting analysis of the measuring experiment, and finally made the conclusion that in the measurement, it is the maximum value of the digital voltmeter in the process that the ring pulls off the liquid membrane that should be read.

Introduction

The liquid surface tension coefficient is a very special problem in physics. Strictly speaking, the interface layer of the liquid is a three-dimensional phase space with several molecular thicknesses. At this moment, various macroscopic properties of the system, such as density, refractive index, molar volume, energy in the interface will mutate, showed the surface tension phenomenon such as wet and non-wet phenomenon of liquid to solid, internal and external pressure difference of curved liquid, capillarity, dissolution, diffusion and osmosis etc. The liquid surface tension coefficient has some application value in ship manufacture, water conservancy, chemistry, chemical engineering and condensed matter physics. Measuring the surface tension coefficient of liquid has various methods. Currently, the most widely used method is pulling escape [1,2]. Since when to read the shown data of liquid surface tension coefficient is controversial in many students' experiments of using FD-NST-I to measure, this paper mainly analyzed and discussed when the data will be read in this experiment through three aspects: the analysis of the liquid film pulling escape process, the mathematical discussion of the liquid film pulling escape process and the micro-interpretation.

Experimental measurement device and principle

This experiment uses the FD-NST-I type liquid surface tension coefficient measuring instrument, as shown in Fig.1, and then uses the silicon pressure resistance sensor witch have more sensitivity and accuracy, and changes the force to electrical signals to measure tiny tension [3,4].

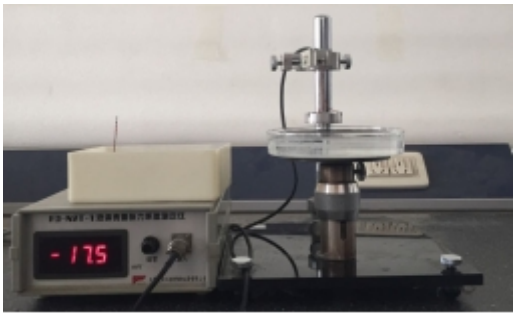

Fig. 1 FD-NST-I type liquid surface tension coefficient measuring device

Copyright © 2017, the Authors. Published by Atlantis Press.
This is an open access article under the CC BY-NC license (http://creativecommons.org/licenses/by-nc/4.0/).

Because of the influence of the molecular force in the liquid surface layer, when the liquid is stretched under external force to form a liquid film, the pull f is proportional to the length of the stretched liquid film, that is

$$f = a \times l \tag{1}$$

if the inner and outer diameter of the measuring ring is D_1 and D_2, then

$$f = ap\left(D_1 + D_2\right) \tag{2}$$

The output voltage size of the the silicon pressure resistance sensor is proportional to the external force F in a certain range, that is

$$U = k \times F \tag{3}$$

the k is the sensitivity of force sensor, which is determined by the mass of weight calibration [5,6].

In the experiment, the rings are cleaned and leveled first, then the lower edge is dipped into the liquid to be measured, and the lift knob is adjusted uniformly and slowly, so that the liquid surface drops gradually. At this time, a ring-shaped liquid film is formed between the hanging ring and the liquid surface, as shown in Fig. 2(a), and its force analysis is shown in Fig.3

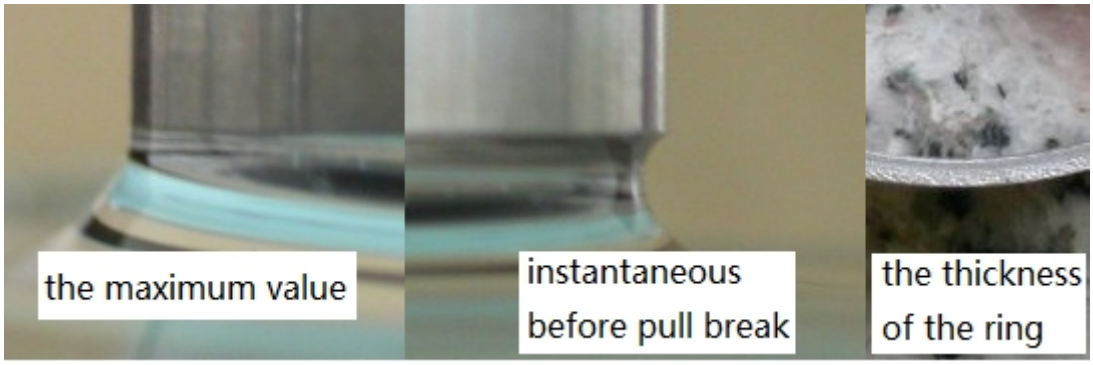

Fig. 2 (a) liquid film when the number is the maximum value (b) liquid film instantaneous before pull break; (c) the thickness of the metal ring

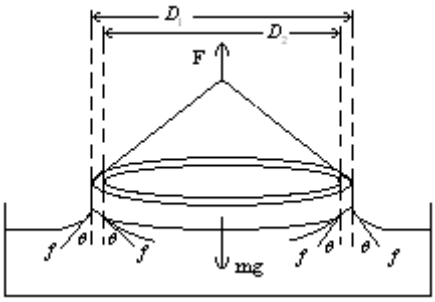

Fig. 3 Force analysis diagram of liquid film before breaking

The equation of force balance before the liquid film is broken is

$$F_1 = mg + f\cos q = \frac{U_1}{k} \tag{4}$$

U_1 is number of digital voltmeter, and changes with the stretching of liquid film.

When the liquid film is pulled off, the surface tension of the liquid disappears. Then there

$$F_2 = mg = \frac{U_2}{k} \tag{5}$$

It is known by (4) - (5)

$$F_1 - F_2 = f\cos q = \frac{U_1 - U_2}{k} \tag{6}$$

When $q = 0°$, $\cos q = 1$, $f = \frac{U_1 - U_2}{k}$. As long as we measure the number U_1 and U_2 of digital voltage in the experiment, the liquid surface tension coefficient a can be calculated [7,8]

$$a = \frac{U_1 - U_2}{kp(D_1 + D_2)} \tag{7}$$

Since the metal ring has a certain thickness, as shown in Fig.2 (c), it is observed that the liquid film is not broken at the surface of the metal ring, but at the thinnest point between the liquid surface and the metal ring, as shown in Fig.2 (b), here $q \neq 0°$. Recording the data by the breaking moment results in smaller results, so the coefficient of liquid surface tension can not be calculated according to the instant of breaking.

Therefore, the key point of the experiment is when is the best reading time of measure of U_1 and U_2 in the formula. Then the following discussion will be carried out on this subject.

Digital voltage representation reading discussion

The force analysis of pulling escape process

When the metal rings are pulled out of the liquid surface, there are five phases to be discussed in the process of the metal ring pulling out of pure water surface as shown in Fig. 4

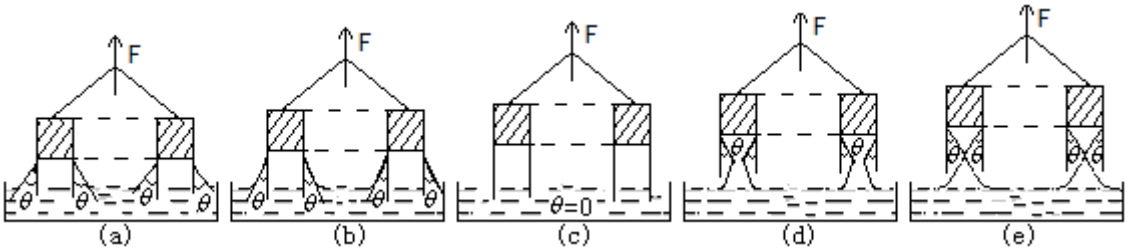

Fig. 4 Change of shape of liquid film in pulling escape process

In the first stage, when the metal rings are pulled out of the liquid surface, the liquid film is taken along the inner and outer sides of the ring as shown in Fig.4 (a). In the second stage, as the distance between the ring and the liquid surface increases, the angle q will become smaller gradually, as shown in Fig. 4 (b). At this point, the pull F of ring will gradually become larger. In the third stage, as the distance between the rings and the liquid surface increases gradually, q decreases to zero, the liquid film is not broken at this time, as shown in Fig.4 (c). In the fourth stage, continuing to increase the distance between the rings and the liquid surface, and the stretched liquid film gradually becomes thinner. At this time, q will increase in reverse direction, as shown in Fig. 4 (d). In the fifth stage, continuing to pull up the metal ring, the liquid film becomes thinner and thinner until it is broken, as shown in Fig. 4 (e).

As the digital voltmeter we observed shows changes of the numbers, before the film broken, with the increase of the distance between the metal rings and liquid surface ,q angle decreases gradually, the pull $F_1 = mg + f\cos q$. Therefore, when F_1 becomes larger, the number of the digital voltmeter shown gradually becomes larger. When the q angle is reduced to zero, F_1 reaches the maximum value is : $F_1 = mg + f$, and the number of corresponding digital voltmeter also reaches the maximum value. Continue to stretch the liquid film, at this time, the q angle increases reversely, $\cos q$ become smaller, so F_1 become smaller, and the number of digital voltmeter also become smaller gradually. So we will observe in the experiment when the metal rings are pulled out of the liquid surface, the

number of digital voltmeter will first grow larger and then smaller. When q =0°, the number U_1 of corresponding digital voltmeter is the maximum value.

The mathematical discussion of liquid film pulling escape process form

Next, the physical quantities in Eq. 6 $f\cos q = \frac{U_1 - U_2}{k}$ are analyzed and discussed: f is the surface tension of the liquid which is proportional to the length of the surface boundary, and the metal rings used in the experiment did not deform, therefore, the liquid surface tension f is a constant. When the liquid film is stretched, the angle q between the liquid film and the vertical direction firstly decreases to 0 angle, and then increases in reverse direction along with the increase of the distance between the rings and the liquid surface, which is a variable. U_1 is the number of digital voltmeter before liquid film breaking, which changes with the distance between the ring and the liquid surface. Before the liquid film breaks, $F_1 = mg + f\cos q = \frac{U_1}{k}$, so U_1 is a variable; U_2 is the number of digital voltage meter after the liquid film is pulled off, after the liquid film is broken, $F_2 = mg = \frac{U_2}{k}$, so U_2 is a constant; k, the sensitivity of force sensors, which reflects the corresponding relationship between the pull and the number of digital voltage meter, and in a certain range it is a fixed value, so k is a constant. The corresponding Eq. 6, the left and right ends of the equation have the variable: q and U_1, when in the left equation q =0 angle, $\cos q = 1$, the left equation reaches the maximum value. Therefore, the right side of the equation should also reach the maximum value, so when the digital voltage reading U_1 should read the maximum value, the equation is establishment.

Microscopic interpretation of liquid film pulling escape process

From the micro perspective, surface tension is a special force, a performance of liquid properties and interactions of a thin layer of molecules in a liquid surface which is different from the intermolecular interactions of the liquid and gives liquid surface a special nature. From the view of macroscopic, liquid surface shows the shrinkage trend and the whole surface is left to be the state of being tense, which is the cause of the tensile force coplanar and tangent to the liquid surface. In brief, liquid surface tension is attraction between adjacent parts of a liquid surface layer. Thus it can be seen that liquid surface tension is the interaction between the liquid surface and the other part of the liquid surface, both the object applying force and the object receiving force are liquid.

Data measurement and reading analysis

In the experiment, we measured some experimental data, including the maximum of digital voltmeter U_M in the pulling escape process, the momentary value U_Q when the ring has just left the liquid membrane, the number of digital voltmeter U_2 after the ring just left liquid membrane. Concrete value seen in Table 1. The inner and outer diameter of metal ring in experiment are 0.03496mm and 0.03310mm respectively [9].

Table 1 the measuring of liquid surface tension coefficient t=20°C

	1	2	3	4	5	6	7	8	average
U_M/mV	34.2	34.3	34.4	33.8	34.5	33.8	33.6	34.2	34.1
U_Q/mV	31.4	31.1	31.3	31.9	31.4	31.8	31.1	31.1	31.4
U_2 /mV	-5.2	-5.2	-5.1	-5.4	-5.2	-5.3	-5.3	-5.3	-5.3
ΔU_M /mV	39.4	39.5	39.5	39.2	39.7	39.1	38.9	39.5	39.4
a /m N·m^{-1}	72.0	72.2	72.2	71.6	72.5	71.4	71.2	72.2	71.9
ΔU_Q /mV	36.6	36.3	36.4	37.3	36.6	37.1	36.4	36.4	36.6
a' /mN·m^{-1}	66.9	66.3	66.5	68.1	66.9	67.8	66.5	66.5	66.9

Do calibration of force sensitive sensors [10] and conclude the coefficient between U and F, k=2.56*10^3 mV/N.

According to Eq. 4, to calculate the liquid surface tension coefficient of 20 degrees' pure water, the result a is equal to 71.9*10^{-3}N/m by using the maximum of digital voltmeter U_M in pulling escape process, the relative error is 1.24%, and the result a' is equals to 66.9*10^{-3}N/m by using the momentary value U_Q as soon as the ring just left liquid membrane and this relative error is 8.10%. We find out that the liquid surface tension coefficient of 20 degrees' pure water is equal to 72.8*10^{-3}N/m through reference material. So it shows that it is more accurate to measure the liquid surface tension coefficient by reading the maximum of the number of digital voltmeter occurring in pulling escape process, which also confirms the accuracy of the preamble.

Conclusion

With the force analysis of pulling escape process of ring leaving liquid membrane, the mathematical discussion of empirical formula and the experimental data compared and analyzed, we focused analysis on the five stages of pulling escape process of ring left liquid membrane, discussed the reason of voltage change in each stage, explained the maximum of the number of digital voltmeter occur in pulling escape process and concluded that the maximum number of digital voltmeter in the process is supposed to be read. Although there is only minute difference between the number of digital voltmeter presenting the instant the ring just left liquid membrane totally and the maximum of the number of digital voltmeter occurring in pulling escape process, according to relevant essays, it is more private to measure the liquid surface tension coefficient by reading the maximum of the number of digital voltmeter occurring in pulling escape process. Our work can suffer the easily confused practical questions in students' experiment and contributes to significant meanings in experiment teaching.

Acknowledgements

This work was financially supported by the Liaoning College Students Innovation and Entrepreneurship Program (201710146000206) and University of Science and Technology Liaoning Teaching Reform Project (XJGYB201717).

Reference

[1] Woyun Long and Jing Li: University Laboratory Work Research Vol. 116 (6) (2013), p. 40.In Chinese.
[2]Yanqin Li , Qiao Sun and Xuehui Li: Laboratory Research and Exploration Vol. 28 (11) (2009), p. 103.In Chinese.
[3] Lifeng Jiao and Shenlong Lu: Physical Experiment Vol. 22 (7) (2002), p. 40.In Chinese.
[4] Junyi Chen and Weimin Fan : Laboratory Research and Exploration Vol. 21 (5) (2002), p. 42.In Chinese.
[5] Changqing Ji and Yanqin Li:Experimental Technology and Management Vol. 28 (4) (2011), p. 46.In Chinese.
[6]Yanqin Li and Hongjian Zhang:Laboratory Research and Exploration Vol. 32 (4) (2013), p. 43.In Chinese.
[7] Wei Dai: Physics Experiment Vol. 31 (10) (2011), p. 29.In Chinese.
[8] Guoli Ma and Weiwei Feng: Physics Experiment Vol. 32 (3) (2012), p. 25.In Chinese.
[9] Ningxuan Yang, Xueyan Wang and Haibin Cao: Physical Experiment of College Vol. 29 (6) (2016), p. 113.In Chinese.
[10] Yang Lu: Physical Experiment of College Vol. 28 (5) (2015), p. 123.In Chinese.