ATLANTIS PRESS
Advances in Engineering Research, volume 125
International Conference on Material Science, Energy and Environmental Engineering (MSEEE 2017)

Study on Pressure Compensation and Constant Flow Control in Triaxial Test

Zhengao Wang [a], Mingfu Yin [b, *]
School of mechanical engineering, Tianjin Polytechnic University, Tianjin 300387, China
[a]1549956278@qq.com, [b]yinmingfu@163.com

Keywords: triaxial loading, pore water, pressure compensation, constant flow.

Abstract. In order to change the present situation that the rock pressure is inconsistent with instruction in the traditional triaxial loading test and traditional axial piston pump can only change flow by controlling the swash plate angle in pore water test, this paper introduces in detail a type of rock pressure compensation structure and the theoretical derivation formula of pressure compensation. On this basis, the paper uses the parallel piston pump system to achieve constant flow loading of pore water to rock in the pressure chamber, gives the characteristic of double pump movement and flow, and designs overall scheme and hardware system of MSP430 MCU controller of the control system. Thus concluded that the rock stress in triaxial test with load cylinder instructions are equal and the pore water constant flow load changed the traditional swash plate plunger pump flow control of complex structure.

1. Introduction

Rock triaxial test are simulated in a laboratory environment deep formation environment, the reappearance of deep rock in formation pressure, gas and liquid filtration, high temperature (or low temperature) under the coupled action of a variety of physical condition. Test in the process of rock under axial pressure and confining pressure, normal load method makes rock by axial compression stress with instruction, therefore this paper introduces a compensation structure of rock stress, ensure the rock in the process of loading by equal pressure always with load cylinder instruction.

Plunger pump is commonly used for constant flow pore water in the triaxial test load, they have high pressure rated, and compact structure, high efficiency and convenient flow control [1], especially in high pressure and flow need adjustment occasions. The most commonly used swash plate axial piston pump, the flow control is implemented by changing the swash plate Angle, the swash plate variable mechanism to increase the volume and quality of plunger pump, its structure is relatively complex [2].Therefore put forward the precision plunger pump pore water constant flow control system, the system is implemented by controlling the speed of the ac servo motor, completely eliminate the swash plate variable pump body, and use two pump can achieve constant flow pore water output, embodies the hydraulic components digitalization, the development direction of miniaturization.

2. Rock stress compensation principle of triaxial test

Regular triaxial pressure chamber structure as shown in figure 1 (a). The rock chamber must pressure oil to simulate the formation pressure of the rock on the test, when pressure rod piston contact pressure head at the top of the specimen and torque, the piston and the pressure head, the pressure head and on the sample surface after compaction, piston stress distribution is the load oil cylinder to its instruction axial pressure F_a and confining pressure of F_y resultant force F_1, confining pressure s, pressure head on the surface area of S_1, push rod piston underside area of S_h, confining pressure and the resultant force formula is obtained.

$$F_y = (S_h - S_1)P_w \tag{1}$$

$$F_1 = F_a - F_y = F_a + S_1P_w - S_hP_w \tag{2}$$

Due to the loading process is slow, system force balance, sample loading is also F_1 at this time. To simulate the pressure of the sample in the formation, the pressure on the specimen is a dual function of axial pressure and confining pressure, that is $F_a + S_1P_w$, but now is $F_a + S_1P_w - S_hP$, we can be understood as a sample by instruction axial pressure is F_a not $F_a - S_hP_w$, which influence the control accuracy. In order to solve this problem, the design of compressive bar as shown in figure 1 (b) the structure of the piston, The upper chamber is connected with the sample cavity, shall provide the two loops of the cavity S_2 and S_3 on the piston area and satisfy the following relations:

$$S_h = S_2 + S_3 \tag{3}$$

When the piston head and contact strength, the piston and the pressure head, pressure head and on the sample surface after compaction, Self-balancing piston upper chamber area S_2 and S_3 is produced by the connected pressure about the downward pressure F_x :

$$F_x = (S_2 + S_3)P_w = S_hP_w \tag{4}$$

By the formula (1) (4), available piston by F1:

$$F_1 = F_a + F_x - F_y = F_a + S_hP_w - (S_h - S_1)P_w = F_a + S_1P_w \tag{5}$$

The force of the sample is also $F_1 = F_a + S_1P_w$, and its the same axial pressure F_a as oil cylinder loading instruction signal .It is assure that rock in the process of loading by equal pressure always with load cylinder instruction.

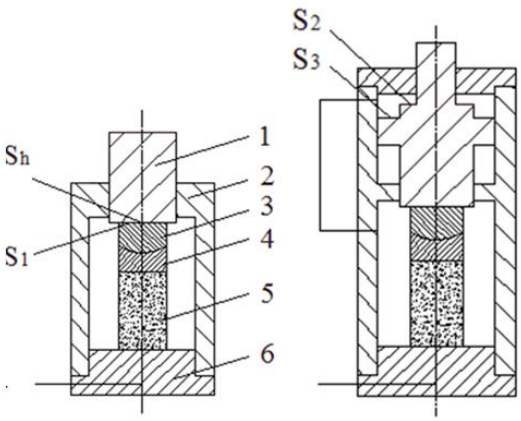

(a) Conventional triaxial loading; (b) Compensation of conventional triaxial loading
Figure 1 triaxial pressure chamber structure
1-Push rod piston 2-pressure chamber 3-on head 4-press head 5-sample 6-foundation

3. Parallel precision plunger pump working principle of the constant flow

Compared with conventional precision plunger pump, the parallel precision plunger pump selection of ac servo motor instead of stepper motor driver, the reason is that compared to ac servo motor stepper motor has more advantages, reflect and control degree, torque-frequency characteristic, low frequency characteristics, overload capacity and speed response ;In addition, the parallel precision plunger pump adopts harmonic gear reducer to coaxial transmission servo motor rotating [4].Compared to other gear reducers, harmonic reducing gear boxes have many superiority, for example with large transmission ratio, high transmission efficiency, etc, which is widely used the areas that require precise positioning.

The constant flow of pore water will be continuously driven to the bottom of the sample, and two sets of precision plunger pumps are used to construct parallel working system. Each plunger pump controls the output pressure from the pressure transmitter[5], The flow is driven by the servo motor to

drive the ball screw to drive the movement speed of the piston. Through the two servo motors are controlled and compensated in the process of motion, which makes the system not only can continuously run for liquid automatically, but also can make the liquid at a constant flow of steady output. As shown in figure 2.

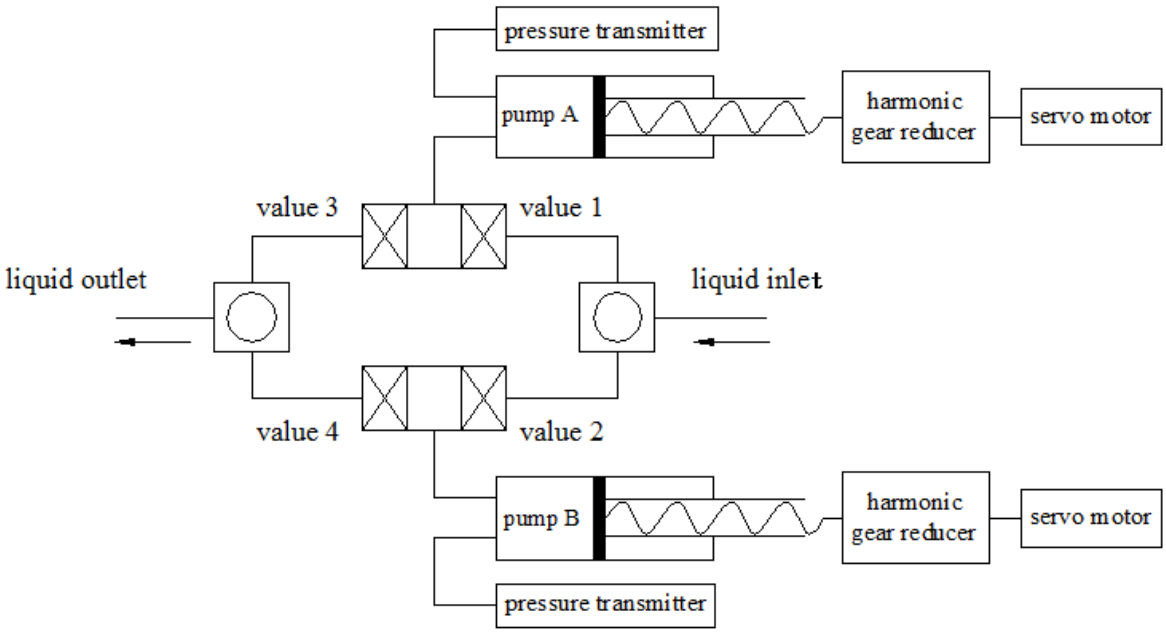

Figure 2 parallel precision plunger pump of hydraulic system

When pump A drainage, pump B quickly pumping water, then the each valve state is that the flow valve 1 opened, inlet the valve 1 closed; inlet the valve 2 opened, the flow valve 2 closed. The B pump is back to the limit of the suction limit before the pump A is close to the drainage limit, and closed the inlet valve 2 and the outlet valve 2. the A pump pressure transmitter tracking system operating pressure, The control system prepress through the B pump pressure transmitter to the pump B is pre-pressurized , and the supercharged value is the running pressure of tracking. When the A pump starts to decelerate with acceleration a, open the liquid outlet valve 2, B pump also accelerates drainage with acceleration a, until the A pump slow down to 0, turn off the liquid valve 1, B pump uniform acceleration to stable speed value, Complete alternation. After the B pump to continue to drainage, open the inlet valve 1 and close outlet the liquid valve 1, a pump fills the water quickly and pre-pressurize, start the next cycle of operation. [1-3]

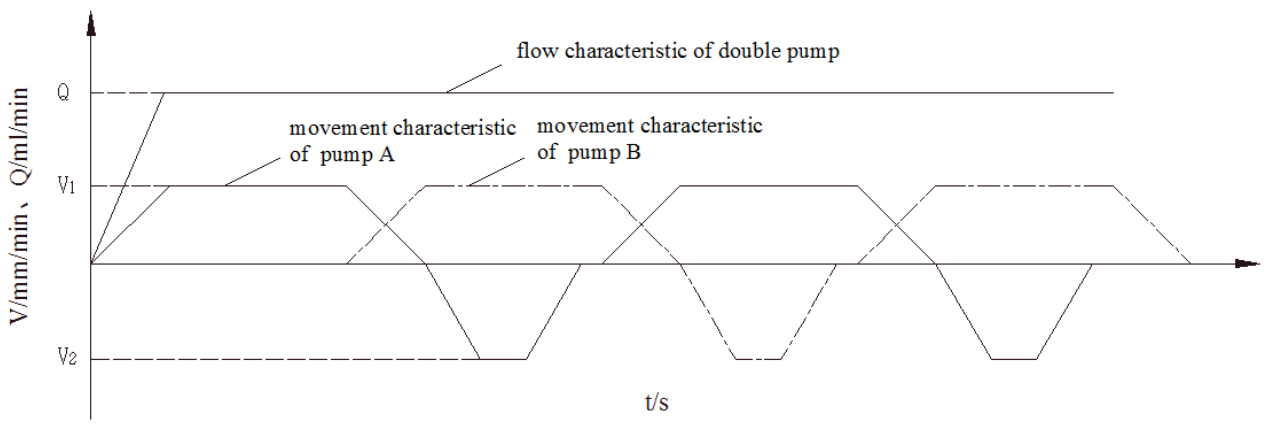

Figure 3 double pump motion and output total flow graph

4. Parallel plunger pump pore water constant flow control

Because of A and B pump servo system composed of the same, so we just account for A pump system. The system select the Panasonic MINAS A5 series high inertia and small capacity three-phase ac servo motor, the most characteristic is built-in 20 incremental photoelectric encoder and servo drives. PC send traffic signals to microcomputer, which converts it to a rotational speed analog voltage and outputs it, servo motor drive speed control of servo motor according to the voltage signal [7], and at the same time detection photoelectric encoder servo motor speed feedback to servo drive, after the driver compares the feedback value to the target value, which obtained numerical can be used to adjust the motor speed to realize the closed-loop control of ac servo motor speed. As shown in figure 4.

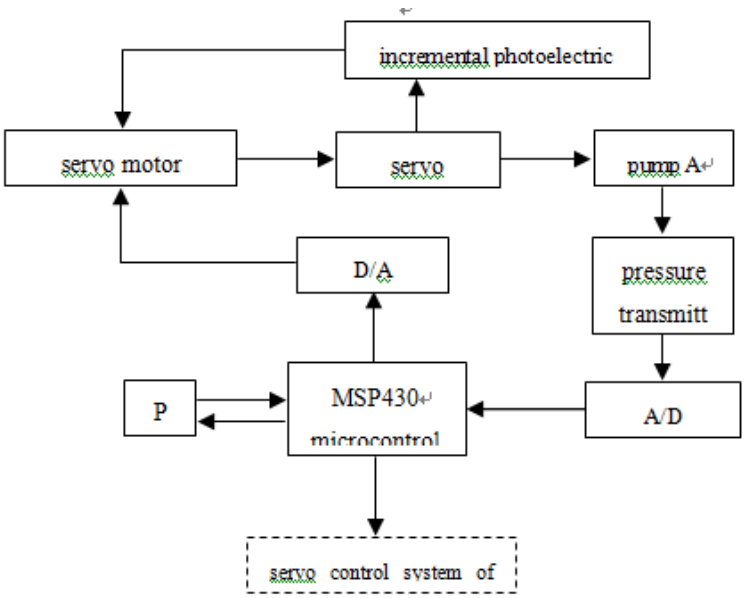

Figure 4 parallel precision plunger pump control system diagram

Throughout the parallel precision plunger pump flow control system, the PC is given to the microcomputer to send water absorption, drainage, pre-pressurization, stop and parameter setting and so on ,and real-time display of A and B piston pump outlet pressure .In figure 4, the pressure sensor monitoring of A and B plunger pump pressure, When A pump needs to be pre-pressurized, MSP 430 series microcomputer shows A, B pump pressure value and gain to different number, The speed instruction is sent to the servo motor driver by PID control algorithm, and then control servo motor drives the piston movement, which makes A pump pressure change, and the pressure real-time transmitted to the PC, just like this feedback control, until A pump pressure reaches B pump outlet pressure value, then complete the pre-pressurization process[7].

5. Conclusion

(1) Adopted triaxial pressure chamber of piston pressure compensation ensures rocks are in the process of loading pressure is always equal with load cylinder instruction conditions meet the requirements of simulation environment test system.

(2) The parallel precision plunger pump linkage system can be carried out on the rock triaxial pressure chamber accurate pore water constant flow load, which changed the traditional swash plate plunger pump flow control of complex structure, embodies the hydraulic components development direction of digitalization and miniaturization.

References

[1] Dai Xiao-lan. A numerical control double-acting plunger pump with constant current innovation design [J]. Journal of mechanical engineering and automation, 2012 (1): 100-101

[2] Lu Fang, Wu Huai-chao. Comes with the shaft of the stepper motor to the design of the variable piston pump and its flow control [J]. Journal of machine tools and hydraulic, 2013 9 (9): 98-100.

[3] Si Peng-hui. Stepper motor and ac servo motor performance comprehensive comparison [J]. Journal of electronic test, 2015 (13): 85-86.

[4] Zhang Da-qing, Hu Ru-yi, Fang Ping. Has determined the transmission ratio of the harmonic gear reducer study [J]. Journal of Henan science and technology, 2013 (15): 106-107118.

[5] Wan Qiang-zhu, Lu Zhi-gang, Wang Ke, etc. The precision of harmonic gear reducer transmission error analysis [J]. Instrument technique and sensor, 2013 (5): 51-54.

[6] Sang Yong, Li Feng-tao, Dai Yue-bang, etc. For the STM32 MCU servo motor control system design [J]. Mechanical and electrical engineering, 2015 (11): 65-72.

[7] Li Cai-ju. Servo motor control system based on MSP430 SCM research [J]. Mechanical and electrical engineering, 2015 (11): 77-80.