ATLANTIS PRESS
Advances in Engineering Research, volume 123
2nd International Conference on Materials Science, Machinery and Energy Engineering (MSMEE 2017)

Simulation and research of automobile induction motor drive control system based on MATLAB/Simulink software

Xiaoqing Zhang

Liaoning Guidaojiaotong Polytechnic Institute , Department of Electrical Engineering, Liaoning, Shenyang, 110000, China

Key words: MATLAB/Simulink software; vehicle induction; motor drive control; simulation research

Abstract: At present, the traditional internal combustion engine vehicles caused serious damage to the environment, in this context, people must re dynamic problems for future cars for a full range of research and discussion, in order to make the traffic of our country energy strategy transformation. In this way, hybrid electric vehicle has been the focus of research. Hybrid cars than conventional cars more than a battery motor system, the main work of this paper is from the motor drive control system, through the research and analysis of the performance of the motor, the induction motor is selected as the research object, the motor drive control system for the modeling and simulation research.

The electric motor is the key part of the electric vehicle, it needs to have the function of frequent stop, start, slow down and acceleration, and it can realize the high torque in the process of gentle slope and climbing. The induction motor has the advantages of simple structure, simple and reliable operation and long service life. With the continuous progress of China's social economy, the development of modern electronic technology, in this context, the induction motor is generally known as the industry of drag motor. The processing ability of MATLAB/Simulink software is more powerful, can realize modeling, simulation, data analysis and image processing capabilities, Simulink MATLAB simulation environment, the visibility is higher, and the oriented structure, so this paper take the MATLAB/Simulink software as the foundation, the simulation study on the auto induction motor drive control system.

Introduction

Hybrid cars than conventional cars more than a battery motor system, both hybrid electric vehicle induction motor is parallel or series, one of the most important part is the motor drive system, motor drive system and control system of hybrid electric vehicle and the core of the important content. The control strategy of the motor system is scientific and reasonable, which affects the performance of the vehicle. At present, the driving power control strategy used in hybrid electric vehicle is the focus of the research in the field of an electric vehicle. The motor suitable for power vehicle mainly includes an AC induction motor, switched reluctance motor, multiphase motor and permanent magnet motor.

Induction motor can also be referred to as asynchronous motor, its structure is simple, and the operation of the process is relatively safe, long life, which is commonly used in industry. Because of the slow development of electronic devices, the progress of induction motor drives. At present, with the continuous progress of modern power electronics technology, a large number of high power electronic devices have appeared in the process, which plays an important role in the development of hybrid electric vehicles. In the hybrid vehicle, the main source of AC motor drives for energy

storage battery, it is the mainstream of the electric potential output, the drive motor is AC power demand, so we must through the power electronic devices convert DC power to AC. [1]

Direct torque control has brought a new revolution for AC motor control, its control idea is unique, and the control principle is simple, the effect is good, make it become one of the principal strategies in AC speed regulation technology. Its main advantages are as follows: first, the principle is simple and easy to understand, realize the mathematical model of induction electronic analysis and control of torque and flux through the stator coordinate system, to avoid unnecessary computational decoupling; secondly, it can directly control the amount of torque, using hysteresis comparator to determine the threshold, it is simple to buy tolerance range were determined. Then the simplified mathematical model of motor control effect and there is a certain relationship; third, direct torque control is minimal in vector control is used to estimate the flux of rotor flux, can reduce influence of motor parameters on control performance. [2]

Direct torque control is mainly the electromagnetic torque and flux to control variables, without the need for mutual conversion of vector and field orientation, does not need the mathematical model of motor decoupling, mainly using voltage vector analysis, emphasizing the direct control of electromagnetic torque. The torque of the point machine is related to the amplitude of the rotor flux and the stator flux, and is also linked to the angle. When the flux amplitude is constant and the angle varies between 0 degrees -90 degrees, the electromagnetic torque will also change. The effect of voltage vector torque, mainly manifests in the rotor flux and stator flux angle control, voltage vector can make the stator flux movement, zero voltage vector can make the stator flux stop, in order to control the magnetic channel size, so as to control the torque. The principle of direct torque control of induction motor is to detect the voltage, stator current and actual speed, so as to get numerical, after the mathematical model of the induction motor input into these values, then a numerical flux and torque extreme actual value obtained by numerical flux amplitude of stator flux and the interval signal. The actual speed and speed can be achieved by the given speed controller torque, the torque and the actual torque controller is obtained by torque switch control signal. Flux feedback and the given two values are processed by the flux linkage controller. Switch signal selection unit includes a flux switch control signal, torque switch control signal and current signal interval, obtained through the look-up table switching control signals of the inverter, the inverter control voltage, the control of motor drive operation. [3]

The dynamic mathematical model of induction motor

In order to make the analysis of induction motor can be more convenient, when creating the induction motor dynamic mathematical model of the influence of some small parameters are ignored, this hypothesis: first, effects of frequency and temperature changes on the winding is neglected; secondly, the hysteresis and eddy current loss of the core is negligible; thirdly, the structure of motor the stator winding and rotor winding of the three-phase symmetrical space harmonics can be neglected; fourthly, magnetic saturation is neglected. Then the equation of the induction motor:

Voltage: $u_s=R_s i_s \Psi^1{}_s$； $0=R_r i_r-\Psi^1{}_r+j\omega\Psi_r$

Flux: $\Psi_s=L_s i_s+L_m i_r$； $\Psi_r=L_m i_s+L_r i_r$

In order to make the modern motor control theory more convenient, it is necessary to create the state space equation of the induction motor. Two phases stationary coordinates (α，-β) are selected, and the state equation of the motor model is based on the stator current and flux linkage:

$x^1=Ax+B\upsilon_s$； $i_s=Cx$

$B=（1/\sigma L_s）J=b_1 I$；

C=[I，0]；
I=[1 0;0 1]；
J=[0 -1;1 0]；
$x=[i_s，\Psi_s]^T$　$A=[A_{11}\ A_{12};A_{21}\ A_{22}]$；
$A11=-（R_s/\sigma L_s+（1-\sigma）/\sigma T_r）I$；
$A12=-M/\sigma L_s L_r（（1/T_r）I-\omega_r J）$；
$A21=（M/Tr）I$；
$A22=-（1/T_r）I+\omega_r J$；
$R_s$and R_r respectively, that the stator resistance and rotor resistance, ω_r said the speed of the motor angle, $L_s$that the stator mutual inductance, L_r said rotor self inductance, L_m said mutual inductance.
The leakage coefficient is expressed as: $\sigma=1-M^2/（L_s L_r）$
The rotor time constant is expressed as: $T_r=L_r/R_r$
The torque equation is expressed as: $T_e=（3/2）（L_m/L_r）P_n（\Psi_{r\alpha} i_{s\beta}-\Psi_{r\beta} i_{r\alpha}）$
The equation of motion is expressed as:$d\omega/dt=（P_n/J）（T_e/T_\iota）$

The induction motor drive control system simulation model

Through the succeeding parts of the formula can be used to simulate the induction motor, which is mainly written by MATLAB/Simulink software.

Flux direct torque control systems generally use the model method mainly includes the current model and voltage model flux and high precision of the flux model, which is a simple flux voltage model. The mathematical expression is:$\Psi_s=\int(u_s-i_s R_s)dt$. At high speed, the voltage in the flux model works; in the vulgar operation, the motor in the current model. Fig. 1 Simulation of flux linkage voltage model. [5]

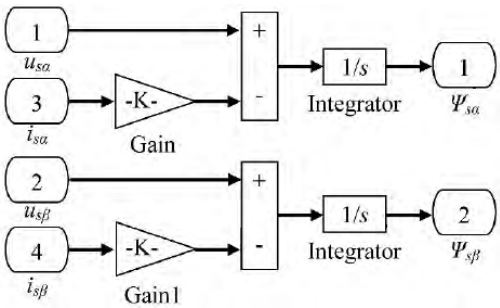

Fig. 1 Simulation of flux linkage voltage model

In order to control the speed closed loop, the speed controller can be used, by comparing the given speed and the actual speed of the measurement, the difference between the speed of the input to the speed controller, the torque given value. The stator flux and torque hysteresis control, the control signal is given by $\Psi_Q$and T_Q when the actual speed is smaller than the incremental value in the given torque, the torque will increase the torque hysteresis control signal is 1, the corresponding voltage space vector, the stator flux can forward rotation speed will increase. [6]

The system simulation results analysis

With the simulation of the electrical parameters are: primary inductance is 0.8mH; the primary resistance is 0.087 Ω; secondary resistance is 0.228Ω; transformer 34.7mH; secondary inductance is 0.8mH; the simulation time between 0 seconds and 1.5 seconds; the initial conditions of state variables for the Q, to start the simulation. In order to get the motor torque and the stator current and motor speed curve simulation for details, see figure 2.

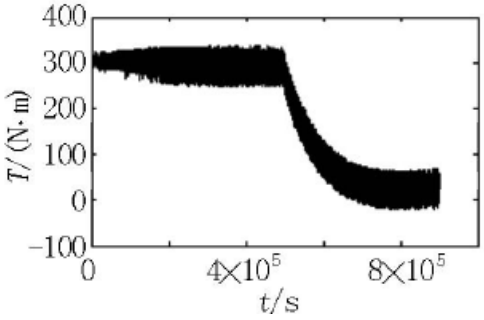

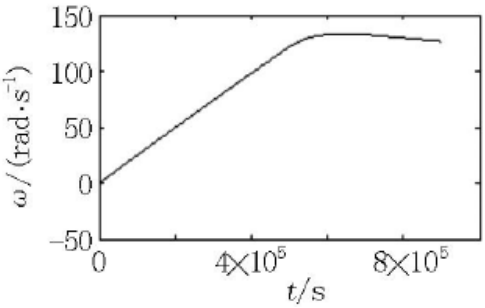

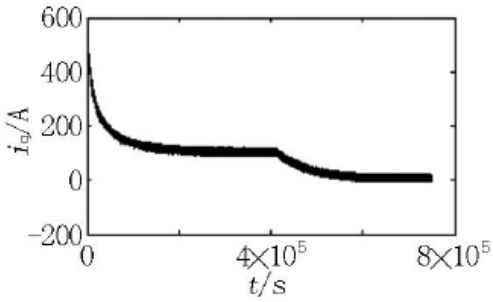

(a) motor torque diagram (b) motor speed diagram

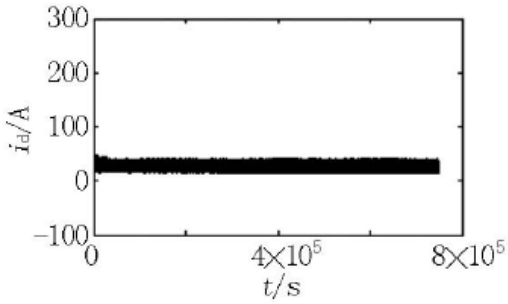

(c) the stator excitation current graph (d) stator torque shaft current diagram

Fig. 2 system simulation curve

Through the above we can see that the system dynamic response is very fast, capable of speed and torque is stable, and can carry out tracking, in addition, the stator current of q axis changes over time, but the D component did not change.

In the process of electronic use, the machine will gradually age, many parameters will change accordingly, thus affecting the speed control effect, motor drive to be able to respond to these changes in the appropriate response. The inductance and resistance of the stator and rotor of the motor have little influence on the speed and torque of the system. If the inductance and the rotor resistance change, the speed regulation of the system will be affected. The main reason is because when the rotor resistance change, rotor time constant will change, but because the motor speed loop, resulting in the variation of rotor resistance has no effect on the steady progress, has a certain effect on the speed of. [7]

Conclusion

MATLAB/Simulink software induction electronic control system simulation model which can control the motor flux based on torque and speed of the motor response is speed, steady-state error and less produced, the simulation model is correct, and it is proved by the simulation of induction motor parameters such as fruit changes, then the control system will be affected. Therefore, these factors should be taken into account in the practical application process.

References:

[1]Costa A, Vilaragut M, Travieso-Torres J C, et al. Matlab based simulation toolbox for the study and design of induction motor FOC speed drives[J]. Computer Applications in Engineering Education, 2012, 20(2):295-312.

[2]Chen S Y, Sun F C. Modeling of Induction Motor Driving System and Performance Forecast on Electric Transmission of Tracked Vehicle[J]. Binggong Xuebao/acta Armamentarii, 2006, 27(4):592-597.

[3]Trabelsi R, Khedher A, Mimouni M F, et al. Backstepping control for an induction motor using an adaptive sliding rotor-flux observer[J]. Electric Power Systems Research, 2010, 93(1):1-15.

[4]Barut M, Yalcin M, Zerdali E, et al. Optimization of Model Reference Adaptive System based Speed Estimation for Speed Sensorless Control of Induction Motors via Differential Evolution Algorithm[J]. Ifac Proceedings Volumes, 2013, 46(11):27-32.

[5]Trentin A, Zanchetta P, Gerada C, et al. Optimized Commissioning Method for Enhanced Vector Control of High-Power Induction Motor Drives[J]. IEEE Transactions on Industrial Electronics, 2009, 56(5):1708-1717.

[6]Pimkumwong N, Onkrong A, Sapaklom T. Modeling and Simulation of Direct Torque Control Induction Motor Drives via Constant Volt/Hertz Technique[J]. Procedia Engineering, 2012, 31:1211-1216.

[7]Riveros J A, Barrero F, Levi E, et al. Variable-Speed Five-Phase Induction Motor Drive Based on Predictive Torque Control[J]. IEEE Transactions on Industrial Electronics, 2013, 60(8):2957-2968.

Biography:Xiaoqing Zhang, (1975.3--) female, Han nationality, Shenyang people, master, lecturer, research direction: Electrical automation technology