ATLANTIS PRESS
Advances in Computer Science Research, volume 59
7th International Conference on Education, Management, Computer and Medicine (EMCM 2016)

Design of Signal Conditioning Circuit for Photoelectric Sensor

Nan Xie[1, a*], Zhennan Zhang[2, b] and Weimin Chen[2, c]
[1]Zhejiang University of Water Resources and Electric Power, Hangzhou, China
[2]College of Mechanical and Electrical Engineering, China Jiliang University, Hangzhou, China
[a]595075251@qq.com, [b]905321889@qq.com, [c]9419@sina.com

Keywords: Photoelectric sensor; Conditioning circuit design; Light & noise eliminating

Abstract. The photoelectric sensor is widely used in the detection field, and its two key parts are the light transmitting and the signal receiving. This paper has designed the pulse modulated light emitting diode constant current source drive circuit, photoelectric diode receiving signal amplifying & filtering circuit and noise eliminating circuit. The noise eliminating circuit has been combined electronic switch with a sampling holder in order to realize the detected light and noise signal being effectively separated by certain software control, and then we could use the differential amplifier to eliminate noise interference signal. Lastly, the experiments verify the effectiveness of this method, and the design combined with the further processing of the software will be greatly to improve the photoelectric sensor' accuracy in some detecting parameters.

Introduction

Photoelectric sensor is applied widely, and its structure is simple and flexible. Photoelectric detection method is widely used in the field of industrial automation because of its high precision, fast response, non-contact and reliable performance. In the present literatures, the detection principle and the system module design of the photoelectric sensor in different parameters are introduced, and the processing circuit design of the sensor technology is simplified. The literature [1-4] introduce all kinds of application of photoelectric sensor in several parameter detection, were not mentioned in the literature [5] signal processing method, introduces the circuit of a photoelectric sensor, but the literature for suppression of background light interference light did not mention. In this paper, the photodiode as the research object, to suppress the noise and eliminate the noise from background light modulation and amplifying and filtering circuit, light receiving circuit is discussed in detail, as the photoelectric sensor to provide design ideas in the application of signal processing to detect the parameters of the design based on the microprocessor, with further processing will be greatly improved the detection precision of the photoelectric sensor parameters.

Design of Pulse Modulation Circuit

The light emitting diode due to its simple structure, small volume and used as the preferred device of photoelectric sensor as a detection device, light source, light source must have stable light intensity, which requires light emitting diode should be connected to a constant current[6-9].

Fig. 1 is the driving circuit of light emitting diode, amplifier A1, VT1 regulator, power tube Q1, capacitance C1 and resistance R1 to R9 constant current source circuit.

As shown in Fig. 1, setting the voltage regulator voltage at both ends of the Vref, and R2=R6=R, R3=R4, then we can get the Eq. 1-3.

$$\frac{V_{ref}-V_Q}{R} = -\frac{(V_N-V_Q)}{R} \tag{1}$$

$$V_Q = V_P = V_M/2 \tag{2}$$

$$V_M - V_N = I_R \times R_7 \tag{3}$$

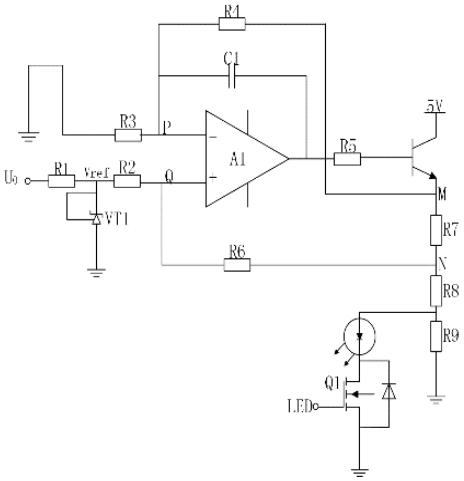

Figure 1. LED driving circuit

By Eq. 2 and Eq. 3 substituting for Eq. 1, we can get IR=Vref/R7. Obviously, selecting the suitable values of Vref and R7, we can obtain the required constant current.

In Fig. 1, the photodiode is connected in series with the Mosfet switch, which is connected between the R8 and the R9. In order to eliminate the influence of the change of the ambient light, the pulse detection method has been adopted. When the control signal LED is high when the light is turned on, the constant current source current flowing from the luminous tube, the detection light would been send; when the control signal is low, the luminous tube cut-off, detecting light would disappear, and then a constant current source current flows through the resistor R9 in order to avoid loop current mutation. In addition, the frequency of the modulated signal can be determined by the control signal.

Signal Processing Circuit Design of Photoelectric Receiver

The photoelectric receiving diode converts the light signal into a current signal. In the process of signal detection, we should take into account the photoelectric current signal receiving diode receiving small, low to μA, and it contains noise[6,9-10]. Therefore, the receiving signal processing circuit includes signal amplifying & filtering circuit and eliminating background light circuit.

Amplifier Filter Circuit Design. The primary amplifier and filter circuit of the photodiode receiver circuit are shown in Fig. 2. The output voltage of the output pulse current i (t) flows through the R10 and the the operational amplifier A2:

$$u_1(t) = -i(t) \times R_{10} \tag{4}$$

Taking into account the self-excited oscillation problem, in the series branch parallel capacitor C2 feedback resistor R10, as shown in Fig. 2, R10 high output voltage can get higher, but it will bring great noise, the design should hold amplifier maximum output voltage below 0. 5V.

In the Fig. 2, R12, R13 and A3 are been composed of amplifying circuit, the amplifier output through R14, C4 for low-pass filter. The magnification of the low-pass filter network is:

$$|A| = \frac{1}{\sqrt{1+(\omega R_{14} C)^2}} \tag{5}$$

When ω tends to 0, |A| is 1, then upper cut-off frequency ω02 is:

$$\omega_{02} = \frac{1}{R_{14} C_4} \tag{6}$$

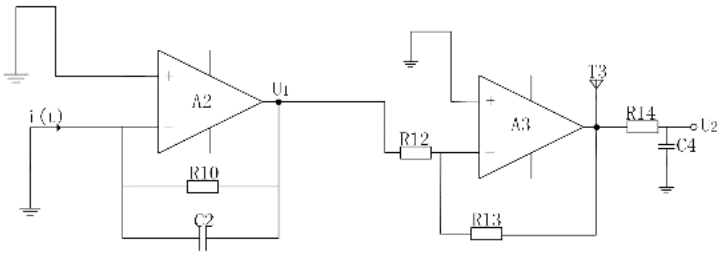

Figure 2. Signal amplification and filter circuit

Background Light Noise Eliminating Circuit Design. In the application of photoelectric sensor, eliminating the influence of background light on the detection results is an important method to improve the detection accuracy. In this paper, the sampling and holding circuits are used to eliminate the background light. In Fig. 2, the U2 output signal accesses by 2 controllable electronic switch being shown in Fig. 3, the controllable electronic switch end are respectively ME1 and ME2, C5, R16 and C6 sampling holder 1, C7, R17 and C8 sampling holder 2.

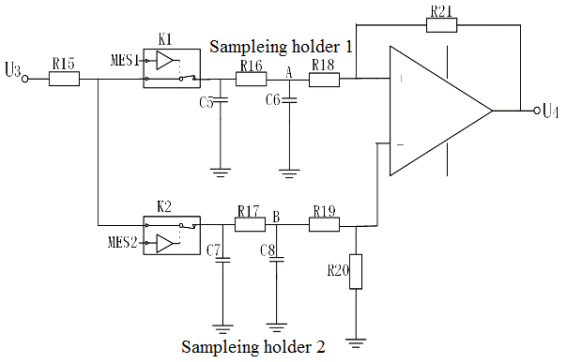

Figure 3. Background light eliminating circuit

The control signal to control the LED signal of the light emitting diode as shown in Figure 4 (a) shows, when the LED is high, the light emitting diode light emitting diode, the received signal of photoelectric receiving device includes a light source detecting sensor also includes background light interference light, when LED is low, the luminous tube is not this light, photoelectric signal received by the receiver as background light interference. Signal to the receiver as shown in Figure 4 (b), where Vmax is the output voltage of light emitted by light emitting diodes detection time electric receiver, figure Vmin said luminous tube without detecting light, photoelectric receiver output voltage only background light and noise.

The controllable signal ME1 of the electronic switch is in phase with the control signal LED of the light emitting diode, while the ME2 and the control signal LED of the light emitting diode are reversed.

When LED is high when ME1 is high, ME2 is low, K2 off the electronic switch K1 turn-on voltage signal, detection of light at 1 A voltage is VA through the electronic switch, the 1 switch during turn-on voltage, A is always VA, during the switch 1 is turned off, the capacitor C5 C6 and the effect of energy storage, high resistance to R16 capacitor cannot discharge voltage, A remains VA. Similarly, when the LED is low, ME1 is low, ME2 is high, the electronic switch K1 is closed, K2 is switched on, at this time, the interference signal light generated by the background of 2 to B voltage is VB through the electronic switch, the 2 switch during turn-on voltage, B is always VB, during the switch 2 turn off C7 and C8, due to the capacitance effect of energy storage, high resistance of R17 make the capacitor cannot discharge, B still maintain the voltage is VB.

The next cycle comes, 1 switch turn-on switch 2 is closed, the signal receiver through the switch 1 update data; when the switch 2 is turned on, the switch 1 is closed, the signal receiver through the switch 2 update data. Because of the phase synchronization control signal of the electronic switch and a light emitting tube control signal, the switch 1 conducting data update is always signal detecting light, switch

2 conduction update data is always only containing the background light signal, therefore, the function of the circuit, the detection and detection of light in light of the voltage signal is decomposed.

R18, R19, R20, R21 and secondary op amp differential amplifier circuit, when the R18=R19=R, R20=R21=R'', the output voltage for U4:

$$U_4 = (V_A - V_B)\frac{R''}{R'} \tag{7}$$

When R '=R', the output voltage of U4 is:

$$U_4 = V_A - V_B \tag{8}$$

From the Eq. 8, the background noise of optoelectronic devices can be eliminated by the above methods.

Experimental Results

In order to verify the validity of the designed circuit, the circuit is verified. In the experiment, the infrared light emitting diode with a wavelength of 890nm is used in the light emitting diode, and the light receiving device is PC-10-6 TOP5. The electronic switch adopts DG444 device, the operational amplifier adopts LF444CD, and the control signal is output by MCS-51 IO.

Fig. 4 (a) for the photodiode received pulse waveform, the cycle is 200Hz, the pulse amplitude is less than 50mV, can be seen from the diagram, the voltage generated in the receiver without detection light is not 0, there is common mode interference signal.

Fig. 4 (b) for the sample and hold circuit 1 light signal through the A point waveform, Fig. 4 (c) for the sample and hold circuit when the 2 light through the B waveform. By controlling the turn-on and turn off signal ME1 and ME2 of the analog switch, the detection of the noise signal and the background noise signal are separated. It can be seen from the figure that the detection of the optical signal is about 900mv, the background light signal is about 300mV, and the background light is larger in the detection of the optical signal.

Fig. 4 (d) is the output waveform of the U4 after the differential amplifier circuit, when the background noise has been eliminated, after re amplification of the amplitude of 1. 25V, the analog signal can be sent to the AD channel, can be further data processing.

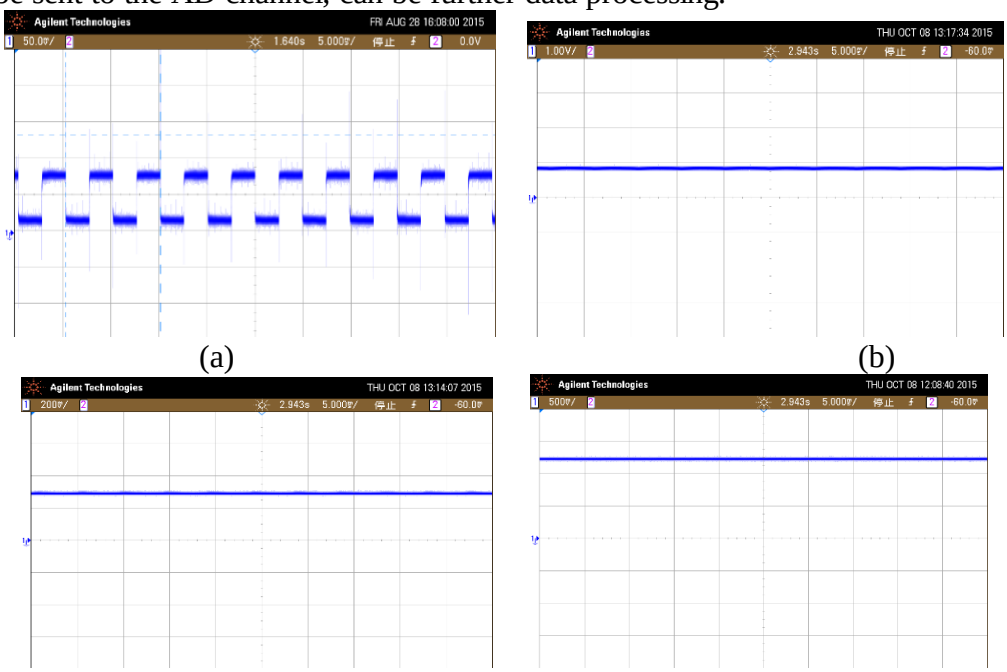

(a) (b)

(c) (d)

Figure 4. Waveform of experiment

Conclusions

In this paper, the typical circuit of the photoelectric sensor is designed, which is used to detect, receive and process the signal. Pulse modulation type constant current source circuit design for light, flow stability, simple structure; the background light elimination circuit, electronic switch, sampling holder combination, through certain control to achieve the detection of light and background light noise signal separation. Finally using differential amplifier to eliminate the interference signal, this method not only can be used to eliminate the noise of photoelectric sensor, noise is also applicable to other signal control and elimination. The design method uses fewer components, simply controlling; the signal processing circuit with microprocessor subsequent software processing, will further improve the accuracy of photoelectric sensor parameter measurement.

References

[1] . Cai Jiaming. Key techniques for improving the precision of photoelectric sensor [J]. Electronic Technology & Software Engineering, 2016, 22(11):95-96.

[2] Tian Shanjiang. Zinc Furnace Wireless Temperature Measuring System Based on Photoelectric Sensor [J]. Automation Application, 2013(05): 67-68.

[3] Liu Yang Wu Hongsheng Yang Fan Xu Jialin. Design of the incremental displacement integrated photo electricity sensor [J]. Journal of Electronic Measurement and Instrument, 2013, 27(10):992-997.

[4] Jin Zhan, Liu Zheng, Lin Yuchi . Design of Characteristic Parameters Test System of Photoelectric Sensor[J]. Chinese Journal Of Sensors And Actuators, 2012, 25(12):1678-1683.

[5] Yang M, Xu W M, Xiao L, et al. Application research on incremental optical grating encoder in laser scanning radar[J]. Transducer and Microsystem Technologies, 2012, 31(3): 36-42.

[6] Yao X An, Hu Sh P, Song F. Output impedance optimization for bus converter in high-performance computer[J]. Journal of Computer Applications, 2012, 32(6) : 1772-1777.

[7] Chen Sh W, Wang Ch H, Cao X D. Design of a wideband low-voltage and low-power CMOS LNA[J]. Microelectronics, 2012, 42(5) : 627-631.

[8] Jiang J, Jiang D F, Gao H. A high accuracy interface circuit design for incremental photoelectric encoder[J]. Measurement ＆ Control Technology, 2009, 28(2) : 1-4.

[9] Wang X, Jia X H, Hao Ch L. Ｒesearch of the sensor about displacement based on the increment photoelectricity encoder[J]. Electronic Design Engineering, 2012, 20(5) : 155-158.

[10] Bryant C L, Gandhi N J. Real-Time Data Acquisition and Control System for the Measurement of Motor and Neural Data[J]. Journal of Neuroscience Methods, 2005, 142(2) : 193-200.