ATLANTIS PRESS
Advances in Computer Science Research, volume 71
4th International Conference on Machinery, Materials and Information Technology Applications (ICMMITA 2016)

Design of double weighting system for lithium battery state estimation

Yang Dong Jin [a], Lou Jian An[b]
School of Ordnance Engineering College, Shijiazhuang 050003, China;
[a]493279963@qq.com, [b] zxs_lja@sina.com

Keywords: lithium battery, Weak signal detection, state estimation, Double weighting system

Abstract. The development of society is restricted by the problem of energy and environment, so battery has been attaching highly importance, lithium battery is widely praised for its high energy density, long cycle life, high open circuit voltage and so on. But the state of the charge of the lithium battery is not yet mature, and it cause a lot of waste of resources. In this paper, a double weighted state estimation system is established based on the characteristics of the lithium battery, the first layer weighted is by using weak signal detection technology, battery resistance measurement is implemented based on AC impedance method, the second layer weighted is by using neural networks, the resistance is the main parameter to achieve the estimation of battery's SOC. A double weighted system consisting of two weighted systems, it can easily achieve the estimation of the internal resistance and state of lithium battery.

Introduction

As a kind of battery of new energy, the lithium battery has the advantages of higher performance, non-pollution, longer lifetime compared with other secondary batteries, which plays a wide and vital role in the application fields of new energy vehicles, communication equipment, aerospace power supplies, medical equipment and so on [1]. Energy alternative, the rise of Power weapons, the dependence of the armed forces on the lithium ion batteries is gradually deepening. The study of estimation including charge and discharge process, SOC estimation, SOH estimation , battery temperature, the balance between monomer batteries and battery failure diagnosis and so on. With the rapid increment of lithium battery requirement, higher requirement is proposed for the industrial production, product quality and on-line monitoring equipment of lithium battery. A dual weighted state estimation system is proposed in this paper, introduce weak signal detection technology, it can easily solve the nonlinear disturbance and precision measurement results.

The status of lithium battery state estimation[2,3]

Early 90s, after SONY company invented the lithium-ion battery, because the advantages of higher performance, non-pollution and so on, lithium battery has been developed rapidly, at the same time, the detection technology of lithium battery is also constantly updated. The begin of the detection of lithium ion batteries is the variation of voltage magnitude, the voltage and current of the battery are proportional to the amount of electricity, so the state of battery will be able to directly to know by direct observation the current and voltage size. With the development of lithium battery, the earliest SOC detection algorithm has arisen-- Ah integral method, and then the open circuit voltage method, load voltage method and resistance method is appear, Ah integral method is the simplest method to achieve SOC measurement, it can detect in real time, But this method requires initial conditions, measurement period is very long, and have margins of error, at present, Ampere-hour integral method was improved when application. The open circuit voltage method is through the constant current charge and discharge characteristics experiment of lithium ion battery, get the curve between the open circuit voltage of lithium ion battery and SOC, refer to the mathematical model of lithium ion battery, implement the estimate of SOC, in other words, get the battery voltage can know SOC, but this method is very long, and cannot be used for real-time measurement. All of these methods have large errors relatively, then mature method being studied, for example, mathematical model method and kalman filter method, and kalman filter method has been used very

well. After the advent of the neural network, intelligent control is applied to the online detection of the battery, by improving the methods in the field of intelligent control like artificial neural network method, fuzzy control inference method has been well used in online detection. Although the current lithium battery online detection technology relative to twentieth century has been a qualitative change, but to realize the battery real-time on-line detection, the current study is just the beginning, the future development of lithium battery testing technology is also very long.

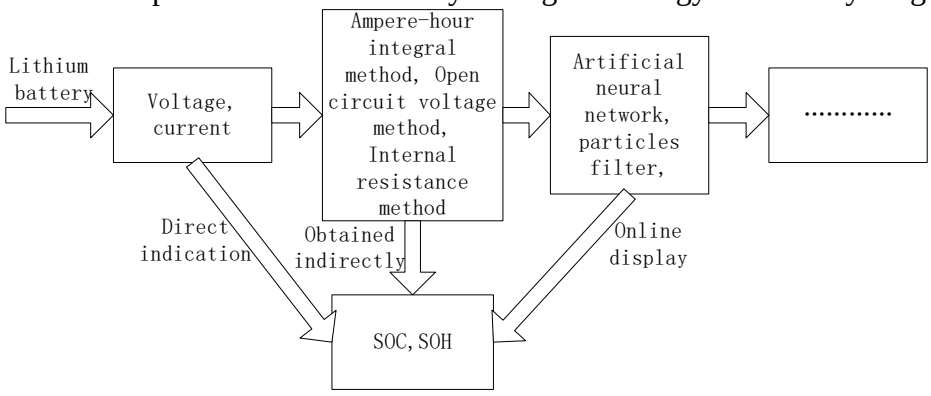

Fig. 1 The development of lithium ion battery testing technology

Point out in the IEEE standard 1188.1996 that the standard capacity is less than 80% of the rated battery needs to be replaced. The traditional SOH detection method is definition method and volume method, capacity attenuation method is get the specific relationship between the battery capacity and the SOH by using the battery for a long time, battery life prediction was achieved by graph. Now, In addition to the methods of artificial intelligence similar to SOC detection like fuzzy logic method, neural network method, and the least square theory, adaptive gradient theory and vector machine theory, etc.

The design principle of the state estimation system for lithium battery

On the basis of summarizing, the studies in the domestics and overseas, the internal resistance of lithium battery is the main factor to determine the state of lithium battery as show in [3], on the basis of AC impedance method combined with the weak signal detection technology, analysis on the modeling of three methods to realize the internal resistance of lithium battery, finally, the weighting system is realized by three methods, the advantages and disadvantages of each method are combined to realize the high precision impedance test. On this foundation, consider the other factors that affect the state of the battery, which are voltage, current, temperature and resistance, to estimate the state of charge of lithium battery by using the process neuron network based on the expansion of the weight function. Combined with the above two kinds of research ideas, establish a double weighted system with weak signal detection and neural networks(as shown in Figure 2), achieve precise estimates of the SOC of lithium battery. Then according to a certain relationship between SOC, SOH and capacity, the SOH is calculated by relative algorithms.

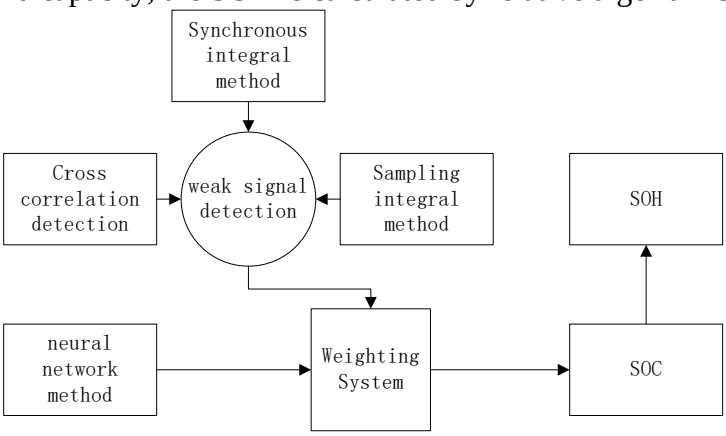

Fig. 2 The flow chart of double weighted system

The algorithm composition and related algorithm improvement of double weighting system

The first weighting system[4,5,6]. Weak signal detection technology is the research, observation, record of scientific research and production of the small changes of various physical quantities, enlarge the amplitude of the weak signal only under the condition of suppress noise effectively, the useful signals can be picked up. So weak signal detection technology is a special technology that fight with noise, the main task is to improve the signal to noise ratio. Weak signal detection techniques include narrow band filtering, dual band noise elimination, synchronous accumulation, locking and receiving methods, and related detection methods. In practical application, due to the complexity of the signal, it need according to different signals, different requirements, different conditions to use different weak signal detection algorithm. the weighted System consists of synchronous accumulation method and correlation method that conduct the measure of the internal resistance of lithium battery. The system diagram is shown in figure 3.

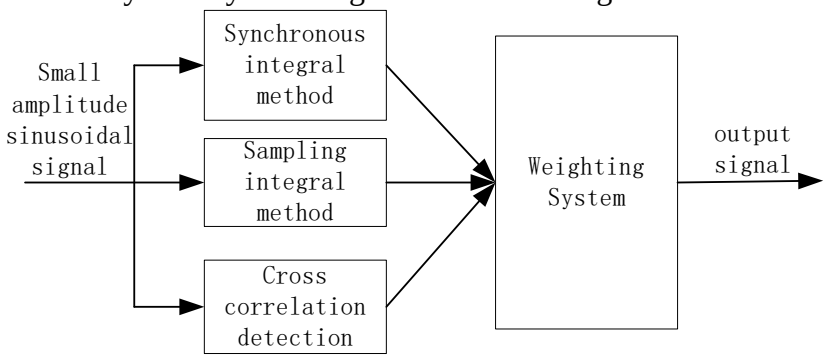

Fig. 3 The weight system of resistance measurement

In this paper, according to the characteristics of the internal resistance of lithium battery, the AC impedance method is improved by weak signal detection technology, generally, the method is used in the normal working state of the battery, and input the small amplitude sine voltage (current) signals of different frequency into battery system, due to the battery work in DC state, the small input ac signal requirement that is not enough to affect battery system to work normally, and then use four line method to measure the corresponding output current (voltage) signal, because of the input signal meets the characteristics of weak signal detection technology, the flow chart of improved method in figure 4.

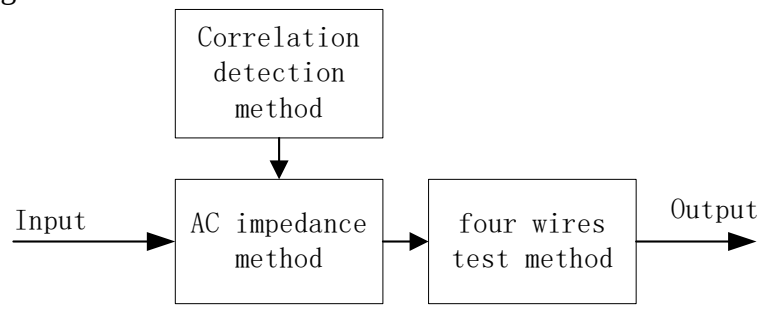

Fig. 4 Flow chart of improved method

The equivalent circuit diagram is designed according to the principle of the three test methods as shown in figure 5. In this picture, V_A is a measured signal, V_B is a reference signal, the switch signals S1 and S2 are controlled by the V_B to turn-on and turn off. The signal to be measured at the same time respectively input three branches，after filtering and extracting into three branch, because the principle of the three methods is different, the results are different. Three outputs converge on the same interface, and the output signal obtained is approximately equal to $3V_0$, minimize the error by taking the mean.

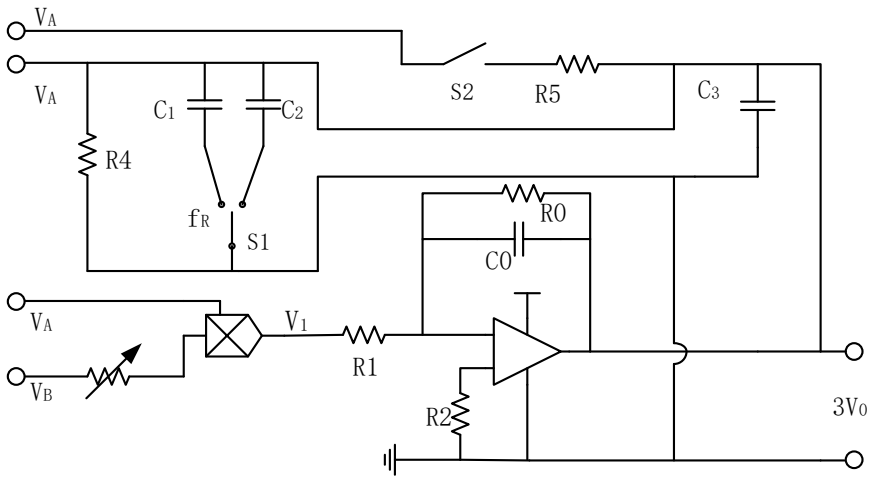

Fig. 5 Equivalent circuit diagram of resistance measurement

The second weighting system [7,8,9]. Neural network is a complex nonlinear system, it can be seen as a black box, the object is only input and output. In this paper, the process neural network algorithm is used to the estimate of SOC, the input and weight of the process neuron can be changed, its aggregation operation consist of the multi input polymerization of space and the accumulation of time. Radial basis function neural network (figure 4) is one of the process neural network, the network is one of the forward neural network, the nonlinear mapping can be achieved by the change of the parameters of the nonlinear transformation function of neurons, and the network learning speed improved by the linearization of the adjustment of connection weights. In this paper, improve the variations of the weight of the radial basis function neural network, the internal resistance is the best important parameter that take the biggest weight compare to other parameter, and to achieve variable weight learning, then it can obtain an accurate SOC value. In figure 6, P is input, W is weight, b is threshold, f is transfer function.

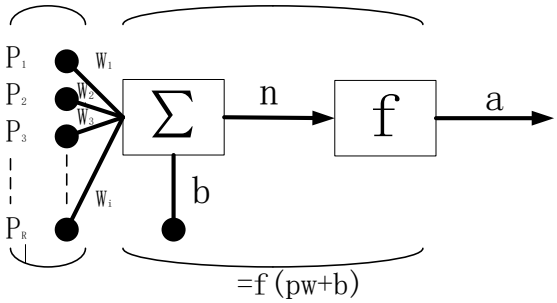

Fig. 6 The structure of neural network

Summary

Resistance is the main factor to determine the performance of the battery, the any changes of the structure of the battery and the working environment will bring the change of the resistance, in this paper, the internal resistance of lithium battery is the main research object, the weighting system composed of weak signal detection technology can accurately measure the size of the internal resistance , on the basis of accurate resistance value, the improved radial neural network method can estimate the state of charge of the battery accurately, protect the operation of the battery, prolong the service life of the battery, and save cost and resources.

References

[1] Wang Fuluan. the summary of the status and application development of the global lithium battery market[J], Journal of power sources,2014.03.

[2] Cai Yong. The electrochemical performance test system of Lithium battery and its application [D], Hunan university, 2015.01.

[3] Gui Changqing. Power battery [M].Beijin: Machinery Industry ,2012
[4] Liu Jun, Zhang Binzhen. Weak signal detection technology [M]. Beijin: Publishing House of Electronics Industry,2005.10.
[5] Gao Jinzhan. Weak signal detection [M]. Beijin: Tsinghua University Press,2011.04.
[6]Sun Shiping. Weak signal detection and application [M]. Beijin: Publishing House of Electronics Industry,2013.02.
[7]Xu Shaohua, He Xingui. Radial neural network and its application [J]. journal of Beijing University of Aeronautics and Astronautics,2004.01.
[8]Qi Zhi, Wu Feng. The study of the prediction of battery SOC by artificial neural network[J], Journal of power sources,2004.08.
[9] He Xingui ,Xu Shaohua. Process neuron [M]. Beijin:The Science Publishing Company, 2007.