Advances in Computer Science Research, volume 63
International Conference on Artificial Intelligence and Engineering Applications (AIEA 2016)

Reluctance Electromagnetic Launch Technology Development Summary

Qiong Wu [a], Xiangfei Cao
Mechanical Engineering College, Shijiazhuang 050003, Hebei, China.
[a]wuqiongpanda@163.com

Abstract. This article describes non-lethal weapons and expatiates the research work and results of the reluctance electromagnetic launcher by the researchers at home and abroad. And predicts the development trend and application prospect of the reluctance electromagnetic gun.

Keywords: Reluctance electromagnetic launch; reluctance electromagnetic gun.

1. Introduction

After the Cold War, the international situation has undergone tremendous changes, the military is more to perform vigilante, peacekeeping and anti-terrorism and other military tasks. At the same time, with the strengthening of human rights awareness, humanitarian calls have become increasingly strong, the need of low damage weapons and equipment becomes more urgent, Non-lethal weapons gradually into people's vision [1]. Non-lethal kinetic energy weapons as a non-lethal weapon family members, is playing an increasingly important role in the mission. Reluctance magnetic gun has characteristics that adjustable power, high precision and constant kinetic energy [2], so it will be widely used in the future military operations.

2. Foreign Research Status

Italy G. William Slade established a mathematical model of reluctance launcher, and set up a four-stage reluctance launcher to verify the reliability of its mathematical model .The transmitter test device and circuit diagram shown in Figure 1 and Figure 2. G. William Slade focuses on the impact of different projectile materials on the launcher performance. Two different materials were chosen, one was steel and the other was ferrite. The geometrical parameters of the two projectiles were the same. The experimental results are compared with the simulation results. The maximum exit velocity of the steel projectile is 18.9m / s, and the maximum exit velocity of the projectile is about 21.5m / s in the simulation process. The maximum exit velocity of the ferrite projectile is 8.4m / s, and the maximum exit velocity of the projectile, the speed is about 9.5m / s in the simulation process.

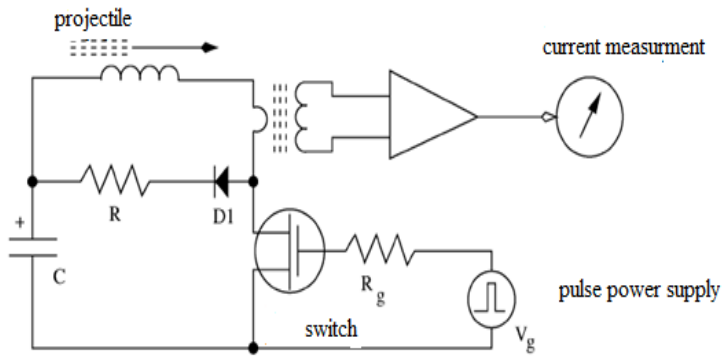

Fig. 1 The circuit of reluctance coil launcher made in Italy

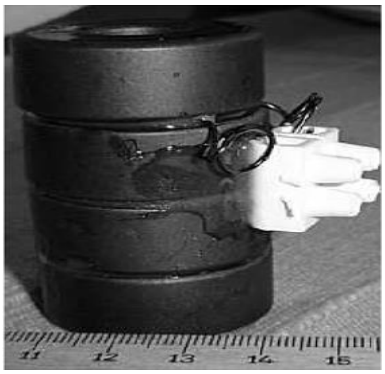

Fig. 2 The tester of four-stage reluctance coil launcher made in Italy

Mahdi Mahmoodi Vaseghi of the University of Zaillard, Iran, formed a four-launcher reluctance launcher, the test platform shown in Figure 3. The launcher uses the position trigger control, and by adjusting the trigger level, to achieve the projectile exit speed controllable. Capacitor voltage is set to 450V, the capacitance value is reduced step by step, the use of thyristor as a switch. Trigger coefficient from 1 to 4, The average exit velocity of the projectile is 14m / s, 35m / s, 54m / s, 71m / s, and the velocity increment decreases with the increase of the trigger level, so multi-stage acceleration is needed.

Fig. 3 The tester of four-stage reluctance coil launcher in Iran

Russia has made an electromagnetic pistol which basic principle is similar to the reluctance coil launcher. Its structure is simple but control is complex. The projectile weight 10.5g was accelerated to 29m / s, and the efficiency reached 5.1%.

Fig. 4 Russian electromagnetic gun

Rezal, National University of Botera, Malaysia, studied single-stage reluctance launcher. A capacitor bank is used as the pulse power source, and the discharge switch is a thyristor. The changes of inductance, magnetic flux density and projectile velocity during the operation of the launcher were measured ,the influence of the launcher and the projectile friction force, the air resistance and the projectile's own gravity on the velocity are analyzed. If the capacitance of the capacitor is sufficiently small, the current in the coil has been reduced to zero when the projectile passes the neutral plane of the coil. By choosing different trigger depths, it is found that there is an optimal trigger depth to maximize the projectile exit velocity.

3. Research Status of Reluctance Launchers in China

Harbin University of Technology Jiang Hongjun set up a three-stage reluctance launcher experimental device in 2004, the magnetic field distribution of the multi - layer solenoid is analyzed and the expression of the magnetic field force in the non - uniform magnetic field near the end of the finite current carrier is deduced. And the program of the initial position of the projectile is obtained. A multi-stage launcher model based on single-chip microcomputer is designed, and the parameters of the launcher are optimized on the basis of experiment. The preliminary design of the electromagnetic launcher model is completed.

Nanjing University of Science and Technology Zhu Hongqiang established a reluctance coil launcher model of the launcher coil design and analysis in 2007. The electromagnetic field of the coil is analyzed by using the finite element software. The relationship between the electromagnetic force, the flux linkage, the inductance and the position of the projectile in the coil is studied. The factors influencing the magnitude of the electromagnetic force are analyzed. And projectile size and coil size were optimized. A timing control circuit based on single chip microcomputer is designed, and a scheme of launcher test system is proposed.

South China University of Technology Liu Yugang proposed the launcher system design in 2010. He mainly studied the working principle of the reluctance launcher, and established the kinetic equation and the equivalent circuit model, finally obtained the analytic solution of the acceleration motion of the projectile. Based on the theoretical analysis, a system design scheme including power subsystem, projectile subassembly and transmitting coil subsystem is proposed. The static and dynamic electromagnetic field characteristics of coil resistance emitter are simulated by Maxwell 2D module and Matlab / Simulink software respectively. The optimal structure parameters of the coil under the condition of maximum exit speed are obtained. A new type of high efficiency reluctance launcher experimental system is designed. The current of the coil and the speed of the projectile are analyzed under different test conditions.

Ordnance Engineering College Meng Xueping had a deep study in the efficiency of the single-stage reluctance coil of the launch, and designed and manufactured seven reluctance coil system, conducted the relevant experiments in 2013. The influence of the parameters such as voltage, free-wheeling current, and coil length, number of coil layers, warhead shape, and projectile mass and projectile length on the performance of the monopolar reluctance coil was analyzed by finite element method. Experiments were carried out on seven stage reluctance coil launchers, and a launcher prototype was designed.

Reluctance electromagnetic gun has advantages that it has good controllability, high security, light and easy to carry and does not need a large current change rate compared with the induction coil launcher. With the deepening of electromagnetic launch research, reluctance electromagnetic launch technology will be further improved, it can achieve no noise, no smoke, no light and achieve the true sense of the "three no." This has a great significance of future military operations [3].

4. Conclusion

Electromagnetic launch technology is booming, because of its simple energy, low cost and easy control, it will become an important force which can’t be ignored in the battlefield of the 21st century and have a far-reaching impact on the military struggle. With the development of electromagnetic launch technology, control technology and power miniaturization and other key technologies, reluctance electromagnetic gun will shine.

References

[1] Luo Zhicheng. Discussing Non-lethal Technology and Weapons [J]. Police Technology, 2, (2007) p. 62-64.

[2] Xiang Hongjun, Li Zhiyuan, Lei Bin, Zhi Bin'an. Research Status and Development Trend of Non-lethal Kinetic Energy [J]. Journal of Sichuan Ordnance, 9, (2011) p. 36-38.

[3] Wang Ying, Xiao Feng. Principle of Electrical Artillery. National Defense Industry Press, 1995, p. 11-14.