Remote sensing image fusion based on orientation information in nonsubsampled contourlet transform domain

YunxiangTian[1,a] and XiaolinTian[1,2]

[1]*Faculty of Information Technology, Macau University of Science and Technology, China*
[2]*Lunar and Planetary Science Laboratory/Space Science Institute, Macau University of Science and Technology, China*

Abstract. For improving the traditional fusion algorithm quality and detail information, a fusion algorithm based on orientation information and pulse coupled neural networks (PCNN) in nonsubsampled contourlet transform (NSCT) domain has been proposed. Firstly, convert the multispectral (MS) image into intensity hue saturation (IHS) colour space. Match the histogram of panchromatic (PAN) image to the histogram of I component of MS image. Then decompose the I component and matched PAN image by NSCT, and apply orientation information combined PCNN fusion rules to NSCT coefficients. Reconstruct the fused I component by inverse NSCT transform. Finally, convert the fused MS image back to RGB space. A large number of experiment results have been done to prove that the method proposed in this paper gives better results than the other techniques used.
Keywords: image fusion; orientation information; nonsubsampled contourlet transform.

1 Introduction

Remote sensing image fusion is the process of combining two or more images of a scene from different remote sensor to create a single image that is more informative than any of the input images. The purpose of image fusion is to decrease ambiguity and minimize redundancy in the output while maximizing the relative information specific to an application [1-2], which is more suitable for human vision perception and computer processing. In remote sensing images, different sensors can obtain different effect images. MSsensor could get large number of different bands MS images with limited spatial resolution and abundant spectral information [3].And the PAN sensor could contain PAN image with high spatial resolution information and limited spectral information. It is necessary to fuse MS image with PAN image. In recent years, remote sensing image fusion has made significant development in the military, target recognition, weather forecast, information security and other research fields. It plays a more and more important role in image processing field.

The image fusion algorithms are broadly divided into two categories which are color space component replacement fusion algorithms and multi-resolution analysis fusion algorithms. The traditional color space component replacement algorithms are mainly about weighted average fusion method, principal component analysis (PCA) fusion method and IHS fusion method. Multi-resolution analysis image fusion algorithms include pyramid transform fusion method, wavelet transform fusion method and multi-scale geometric analysis fusion method. NSCT transform is based on other

[a] Corresponding author : yunxiang_Tian@163.com

transformation which improves the limitation of description of singular to the line and the surface. PCNN is a single neural network model without training process that is suitable for image fusion processing. Considering the advantage of NSCT and PCNN methods, an algorithm based on orientation information combined PCNN in NSCT domain is proposed in this paper. Large quantities of experimental results prove that the fused image can not only keep the spectral characteristics of the MS image but also obtain PAN image detail information at the same time.

2 Nonsubsampled contourlet transform

Contourlet transform is a mathematical tool to express two dimensional signal proposed by Do [4],which the image is decomposed into different scales of subbands through pyramid directional filterbank (PDFB).In contourlet, the laplacian pyramid(LP) is first used to capture the point discontinuities and then followed by a directional filter bank(DFB) to link point discontinuities into linear structures[5]. Experimental results show that contourlet has obvious improvement performance than two dimensional discrete wavelet transform in image processing such as texture and shape feature extraction. In order to obtain shift-invariant property, NSCT transform is proposed. NSCT is a transform that based on nonsubsampled pyramid (NSP) and nonsubsampled directional filter bank (NSDFB).NSP reduce the distortion in the sampling in the filter. NSDFB offers the property that ismulti-direction decomposition [6]. The decomposition framework of NSCT transform is shown in Fig1.

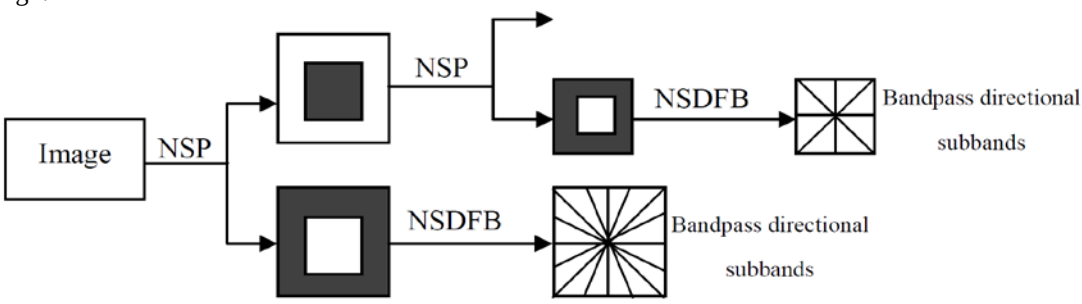

Figure 1. Decomposition framework of NSCT

3 Pulse coupled neural network

PCNN is a feedback network and each PCNN neuron consists of three parts: the receptive field, the modulation field, and the pulse generator [7]. In image processing, PCNN is a single layer pulse coupled neural cells with a two-dimensional connection [8]. The PCNN method has a good effect on image fusion fields. Use PCNN method to deal with image, the neuron mathematical expressions are as follows,

$$F_{ij}^{k}(n) = S_{ij}^{k} \tag{1}$$

$$F_{ij}^{k}(n) = exp(-\alpha_L)\, L_{ij}^{k}(n-1) + V_L \sum_{pq} W_{ij,pq} Y_{pq}^{k}(n-1) \tag{2}$$

$$U_{ij}^{k}(n) = F_{ij}^{k}(n) * \left(1 + \beta L_{ij}^{k}(n)\right) \tag{3}$$

$$\theta_{ij}^{k}(n) = exp(-\alpha_\theta)\, \theta_{ij}^{k}(n-1) + V_\theta Y_{ij}^{k}(n-1) \tag{4}$$

$$Y_{ij}^{k}(n) = \begin{cases} 1, & if: U_{ij}^{k}(n) > \theta_{ij}^{k}(n) \\ 0, & otherwise \end{cases} \tag{5}$$

The firing times is calculated as:

$$T_{ij}^{k}(n) = T_{ij}^{k}(n-1) + Y_{ij}^{k}(n) \tag{6}$$

In this PCNN model, n denotes the iterations, is internal activity in neuron, denotes the frequency coefficients in K-th subbands in (i, j) position, is the synaptic gain strength, denotes input of connections with neurons, is the threshold andβ is the linking strength. is decay constant. V_L and V_θ are scaling terms. If is larger than , the , it means that the neuron generate one firing time. The sum of n iterations is defined as firing times with .

In traditional PCNN methods, the single image gray value is used to motivate one neuron. The relationship between pixels and neurons is one-to-one correspondence. It has been proved that the PCNN method is suitable for image processing. But it can't get good results sometimes. The image orientation information is used to motivate neuron in NSCT domain in this paper. Orientation information is sensitive to human visual system. The experimental results show that the new method has better performance than the traditional way. The image orientation information measure is proposed by Wang [9], the mathematical expressions are as follows,

$$I_{ij} = d_{\theta max} - d_{\theta min} \tag{7}$$

$$d_{\theta_{max}} = \max_{0^0 \le \theta \le 180^0} (d_\theta) \tag{8}$$

$$d_{\theta_{min}} = \min_{0^0 \le \theta \le 180^0} (d_\theta) \tag{9}$$

$$f_{AL} = \sum_{(i,j) \in AL} X\,(i,j) \tag{10}$$

$$f_{AR} = \sum_{(i,j) \in AR} X\,(i,j) \tag{11}$$

$$d_\theta = |f_{AL} - f_{AR}| \tag{12}$$

$X_{i,j}$ stands for the block centre point (i , j), A_L and A_R denote the left and right region in block as shown in Fig 2. Calculate every pixel angle direction in block. The orientation information is considered as the feature to put into PCNN model which is an effective way to present thepiecewise smoothness property of the images [10].

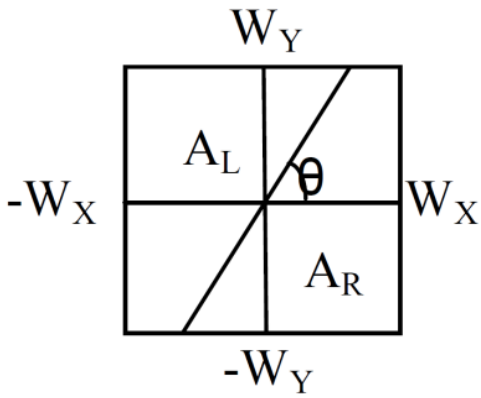

Figure 2. Orientation information measurement

4 Proposed method

In order to overcome the disadvantage of the traditional fusion methods, the new method using orientation information proposed in this paper. Convert the MS image into IHS color space, firstly. Match the histogram of PAN image to the intensity component of MS image. Then decompose new PAN image and I component into high and low frequency coefficients by NSCT transform. Put the image gray value into the PCNN model directly, it will be not effective enough. So the image feature orientation information has been applied to PCNN model to deal with high and low frequency coefficients. The fused intensity component was reconstructed by inverse NSCT. Finally, convert the fused MS image back to RGB space.

The fusion framework is shown in Fig3, the main steps of the fusion scheme are as follows,

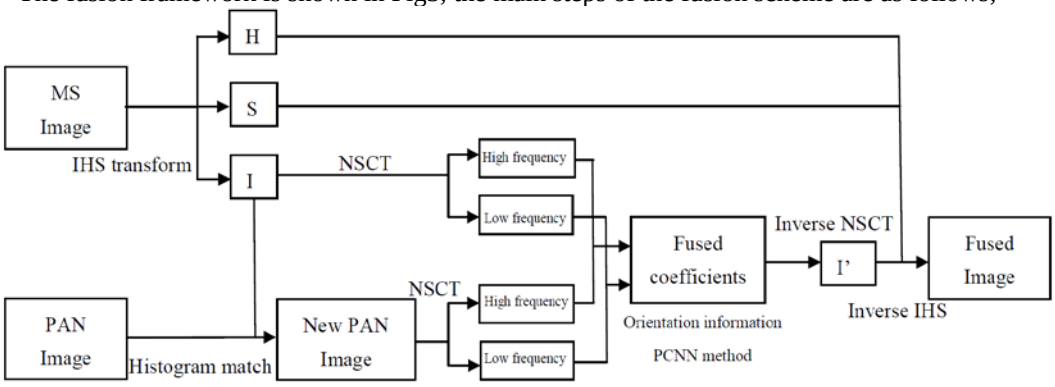

Figure 3. Schematic diagram of the proposed fusion algorithm

Step 1: Convert the MS image into IHS space.
Step 2: Match the histogram of PAN image to the intensity component of MS image.
Step 3: Decompose intensity component of MS image and new PAN image by NSCT.
Step 4: Orientation information combined PCNN method are applied to fuse NSCT coefficients.
Step 5: Reconstruct intensity component by inverse NSCT.
Step 6: Convert the fused multispectral image back to RGB space.

5 Experimental results

To evaluate the effectiveness of the proposed method, two data sets were selected from satellite images. The db4 wavelet basis is selected for the WT process. The parameters of PCNN are . The

method IHS, wavelet and PCNN are compared to proposed method. The experimental results are shown as follow in Fig4 and Fig5.

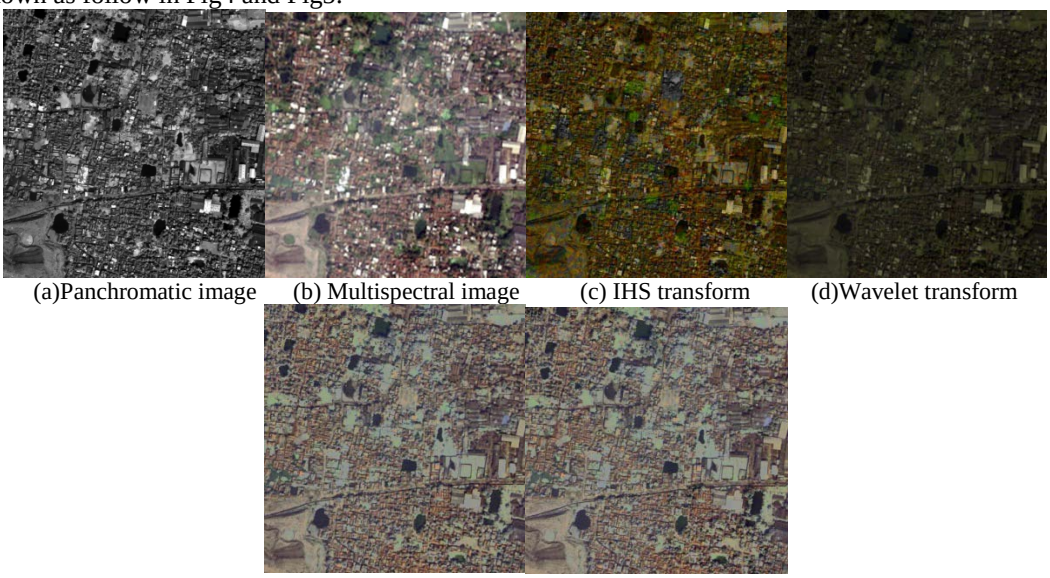

(a)Panchromatic image (b) Multispectral image (c) IHS transform (d)Wavelet transform

(e) PCNN (f) Proposed

Figure 4. First image fusion experiment

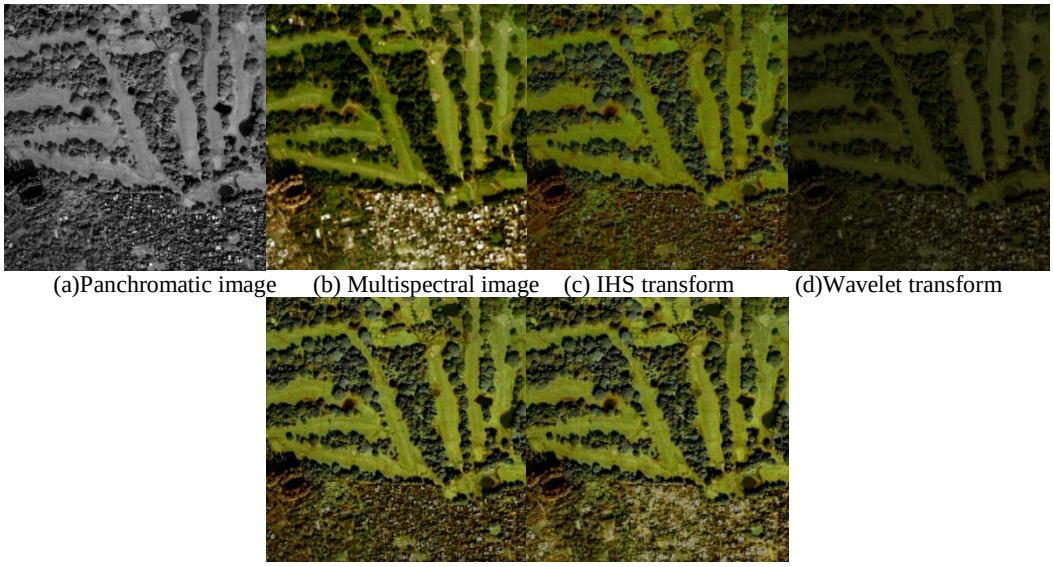

(a)Panchromatic image (b) Multispectral image (c) IHS transform (d)Wavelet transform

(e) PCNN (f) Proposed

Figure 5. Second image fusion experiment

From the experimental results, it has been proved that the proposed method is more conform to human visual system. In Fig 4, IHS method has obvious spectral distortion in detail information, PCNN and proposed method can keep the spectral information better. The edge and details are blur in Fig 4 (d) which used wavelet transform. The building in Fig 5 using IHS and PCNN method are more clearly than the same feature in (d) and (f). The proposed method obtains more spectral information than IHS and PCNN method.

The quantitative evaluation method sindex obtain relevant coefficient, information entropy, standard deviation, average gradient and degree distortion [11] which is shown in table 1.The wavelet

method got maximum value in relevant coefficientandminimum value in average gradient compared with other techniques. It is easy to see that the proposed method has less degree distortion which means that the algorithmremain more spectral and details information.

Table 1. Various performance evaluation of experimental results

Method	Relevant coefficient	Information entropy	Standard deviation	Average gradient	Degree distortion
Experiment 1					
IHS	0.4421	6.4101	26.9780	11.7027	62.2332
wavelet	0.8468	5.7659	14.0190	4.8860	75.0327
PCNN	0.5514	6.9623	32.5589	15.6337	28.3814
proposed	0.5572	6.9657	32.5443	15.4199	28.0563
Experiment 2					
IHS	0.5207	6.3084	27.2587	8.2189	24.6094
wavelet	0.8610	5.4705	13.4967	3.4255	35.4620
PCNN	0.5759	6.7444	38.1801	12.1514	26.4591
proposed	0.7048	6.8234	38.5421	12.2997	23.2343

5 Conclusion

Aiming at the disadvantage of the traditional fusion algorithms, orientation information combined PCNN method proposed in this paper. Firstly, transform MS image into IHS space. Match the PAN image to I component histogram. Then decompose I component and new PAN image by NSCT. Using orientation information combined PCNN to fuse NSCT coefficients. The fused I component was reconstructed by inverse NSCT. Finally, convert the fused MS image into RGB space. No matter from qualitative evaluation methods and quantitative evaluation methods the proposed method shows good performance than other techniques used. Reduce the computing time and use new technology is our research direction in the future.

Acknowledgements

The authors would like to thank the support from Macau Science and Technology Development Fund (No. 059/2013/A2).

References

1. S. Daneshvar, M. Elyasi, M. Danishvar. Multispectral and panchromatic images fusion based on integrating feedback retina and IHS model. Proceedings of the world congress on engineering, **6**, 978-988(2011).
2. B. Khaleghi, A.khamis, Multisensor data fusion A review of the state of the art, Information Fusion, **14**, 28-44(2013).
3. Xianchuan Yu, GuanyinGao, JindongXu, Guian Wang, Remote sensing image fusion based on sparse representation, International Geoscience And Remote Sensing Symposium, 2858-2861(2014) .
4. M.N. Do, M. Vetterli, The contourlet transform: an efficient directional multiresolution image representation. IEEE Transaction on image Processing, **14**, 423-438(2005).
5. Xiaobu Qu, Jingwen Yan, Hongzhi Xiao, Ziqian Zhu: Image fusion algorithm based on spatial frequency–motivated pulse coupled neural networks in nonsubsampled contourlet transform domain, ACTA AutomaticaSinica, 1508–1514(2008).

6. Jingjing Wang, Xiaojun He, Kefei Song, Image fusion algorithm of multi-spectral and panchromaticimages adopting region mutual information, Infrared and Laser Engineering, **8** (2014) 2757-2764.
7. J.L. Johnson, M.L. Padgett .PCNN models and applications. IEEE Transactions on Neural Networks, **10** (1999)480-498.
8. R.P. Broussard, S.K. Rogers, M.E. Oxley, G.L. Tarr. Physiologically motivated image fusion for object detection using a pulse coupled neural network. IEEE Transaction on Neural Networks, **10**, 554-563(1999).
9. Xinnian Wang, Dequn Liang, Orientation-information measure-based image restoration, 2003 International Conference on Machine Learningand Cybernetics, **5**, 2925-2930(2003) .
10. Xianhua Duan, Jiajia Cao, Jia Liu. Application research of modified PCNN model in multispectraland panchromatic images fusion. Modern Electronics Technique, **37,** 55-60(2014).
11. Wang Jinling. Research on remote sensing image fusion algorithm based on multiresolution analysis. Changchu Institute of Optics, Fine Mechanics and Physics, Chinese Academy of Sciences, (2011)