A Design of Sine-wave Oscillator Based on an Improved OP-amp Differentiator

Zinan Zhou

Department of Jiangsu Union Technical Institute Jiangning branch, Nanjing, 211100, China

email:632947449@qq.com

Keywords: Op-amp differentiator; op-amp amplitude-frequency characteristic; sine-wave oscillator; harmonic distortion

Abstract. By analyzing of typical op-amp differentiator circuit considered the op-amp amplitude-frequency characteristic, we give out a design of sine-wave oscillator based on an improved op-amp differentiator. This oscillator is not only the output sine wave harmonic distortion very low, but also easy to design and easy to trimming to fine.

Introduction

At present the active RC sine-wave oscillator includes Wien's bridge oscillator [1] and RC phase shift oscillator. The frequency selecting circuit of Wien's bridge oscillator is two-order band-pass circuit, and its quality factor is 1/3. The frequency selecting circuit of RC advanced phase shift oscillator is three order high pass circuit. The frequency selecting circuit of RC delayed [2] phase shift oscillator is three-order low pass circuit. Their frequency characteristics are poor, so they output large harmonic component.

This paper uses modified active RC differential circuit for frequency selecting circuit. By using the RC phase shift circuit, the phase condition of the oscillator is satisfied [3]. With variable gain amplifier, the amplitude condition and stability condition of the oscillator are also satisfied. The frequency of output sine-wave frequency of the circuit is close to the center frequency of the frequency selecting circuit. The quality factor of the frequency selecting circuit is usually greater than 10, so the output harmonic distortion of sine-wave is very low. The range of oscillation frequency is at least (0.0001~ 0.1)f_T. f_T is op-amp gain bandwidth product.

The basic active RC differential circuit

Figure 1 is the basic active RC differential circuit [4]. If the amplifier is the ideal op-amp, its transfer function is shown as below:

$$H(s) = -sCR \qquad (1)$$

Using EWB as simulation software, first-order op-amp model is type of LF353. With simulation of the circuit in Figure 1, we get the amplitude frequency characteristics of the transfer function, as shown in Figure 2. It is the same as the amplitude frequency characteristics of the two band pass filter.

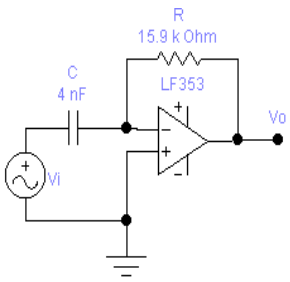

Figure 1

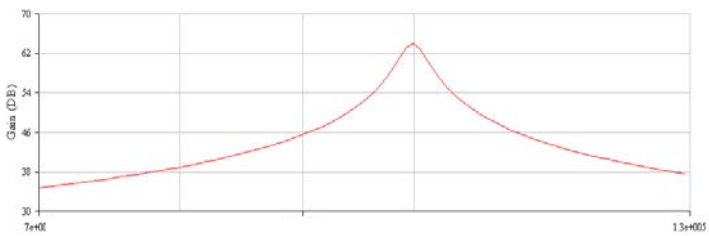

(f_0=99.79kHz,Q=39.4,A_m=63dB)

Figure 2

The transfer function of the basic active RC differential circuit is derived as follows with

first-order op-amp model.

$$A(s)=\frac{k_0}{T_p s+1} \tag{2}$$

k_0 is the amplifier open-loop gain, 1/Tp is one pole. List current and loop voltage equations:

$$\left.\begin{aligned}\frac{v_I-v_N}{1/sC}+\frac{v_O-v_N}{R_1}&=0\\ v_O&=-A(s)v_N\end{aligned}\right\} \tag{3}$$

Can be solved:

$$H(s)=-\frac{\frac{k_0}{T_p}s}{s^2+(\frac{1}{RC}+\frac{1}{T_p})s+\frac{(k_0+1)}{RC}\frac{1}{T_p}}=-\frac{A_m\frac{\omega_0}{Q}s}{s^2+\frac{\omega_0}{Q}s+\omega_0^2} \tag{4}$$

In the above formula, the resonance angle frequency $\omega_0\approx\sqrt{\omega_T\omega_C}$ (set k0>>1), the quality factor $Q=\frac{k_0\sqrt{\omega_T\omega_C}}{\omega_T+k_0\omega_C}$, the gain of the resonant frequency $A_m=\frac{k_0\omega_T}{\omega_T+k_0\omega_C}$, $\omega_T=\frac{k_0}{T_p}=2\pi f_T$, $\omega_C=\frac{1}{RC}=2\pi f_C$.If set R=15.9kΩ,C=4nF,LF353(f_T=4MHz,k0＝2.5×105), we can calculate answers from the 4th formula: f_0=100.05kHz,Q=39.76,Am=64.03dB.The simulation results in Figure 2 are in agreement with the theoretical results.

If take f_0∈（0.0001～0.1）f_T,

$$Q\big|_{f_0=0.1f_T}=\frac{0.1k_0}{1+0.01k_0}\approx 10$$

$$\max\{Q\}=Q\big|_{f_0=\frac{f_T}{\sqrt{k_0}}}=\frac{\sqrt{k_0}}{2}=250$$

$$Q\big|_{f_0=0.0001f_T}=\frac{10^{-4}k_0}{1+10^{-8}k_0}\approx 25$$

Thus we can see that the active differential circuit can be regarded as the two order frequency selecting circuit with a high Q value.

Improved active RC differential circuit

The requirements of oscillator vibration phase condition are shift 0°or an integer multiple of 2kπ. In other words, feedback should be a positive feedback. From the 4th formula, circuit output and input of Figure 1 have an inverse relationship. In order to get positive feedback, it needs to be added a 180 degree phase shift circuit. The improvement of the basic active RC differential circuit is shown in Figure 3. The amplitude frequency characteristics of the transfer function are shown in Figure 4.

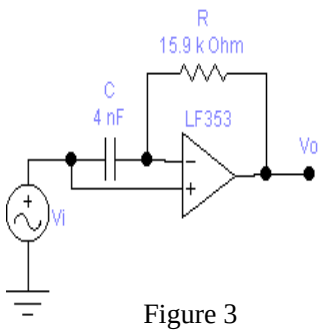

Figure 3

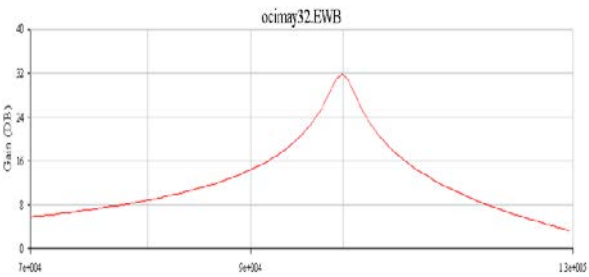

(f_0=99.827kHz,Q=39.81,A_{max}=31.96dB)
Figure 4

List current and loop voltage equations:

$$\left.\begin{aligned} \frac{v_I - v_N}{1/sC} + \frac{v_O - v_N}{R_1} &= 0 \\ v_O &= (v_I - v_N)A(s) \end{aligned}\right\} \qquad (5)$$

Can be solved:

$$H(s) = \frac{\dfrac{k_0}{T_p RC}}{s^2 + (\dfrac{1}{RC} + \dfrac{1}{T_p})s + \dfrac{(k_0+1)}{RC}\dfrac{1}{T_p}} = \frac{A_m \omega_0^2}{s^2 + \dfrac{\omega_0}{Q}s + \omega_0^2} \qquad (6)$$

This is the transfer function of the high Q two-order low pass frequency selecting circuit. In the above formula, the resonance angle frequency $\omega_0 \approx \sqrt{\omega_T \omega_C}$ （set k0>>1）, the quality factor $Q = \frac{k_0\sqrt{\omega_T \omega_C}}{\omega_T + k_0 \omega_C}$,gain at zero frequency $A_m = 1$, gain at the resonant frequency $A_{max} = A_m Q$, $\omega_T = \frac{k_0}{T_p} = 2\pi f_T$, $\omega_C = \frac{1}{RC} = 2\pi f_C$ .If set R=15.9 kΩ,C=4nF,LF353（f_T=4MHz,k0＝2.5×105）,we can calculate answers from the 4th formula: f_0 =100.05kHz, Q=39.76, Amax=31.99dB.The simulation results in Figure 4 are in agreement with the theoretical results.

Thus it can be seen that the improved active RC differential circuit is a two-order high Q low pass circuit. Compared with the basic active RC differential circuit, the resonant frequency and the quality factor have not been changed, and the gain at the resonant frequency has been changed. The phase shift of the circuit at the resonant frequency is -90 degrees.

Sine-wave oscillator based on improved active RC differential circuit

Sine-wave oscillator based on improved active RC differential circuit is shown in figure 5.

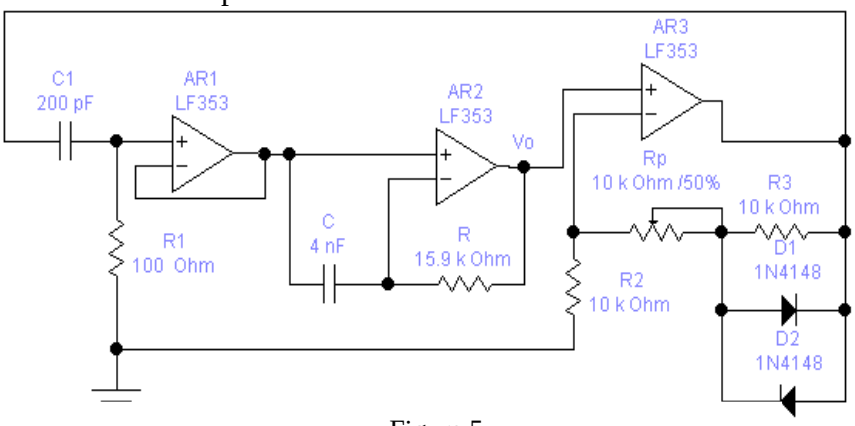

Figure 5

In order to make the phase shift of the whole circuit 0 degree, a phase lead circuit is required

before an improved active RC differential circuit. The circuit is required to provide an advanced phase shift of approximately 90 degrees, in order to satisfy phase condition of the oscillator. The circuit is composed of R1 and C1. The characteristic frequency $f_1=\frac{1}{2\pi R_1 C_1}$ should be much larger than the output frequency f_0 of the oscillator. In this way, the whole circuit can be provided with a slightly less than 90 degrees phase shift. Because the phase shift of the circuit is slightly less than 90 degrees, the improved differential circuit will be more than -90 degrees below the resonance frequency of the signal. Ignoring the phase shift of the voltage follower and the phase amplifier, The absolute value of the extended lag circuit provides advanced phase shift and improved differential phase shift circuit generates the absolute value is equal. Therefore, the actual sine-wave frequency of the oscillator will be slightly lower than the theoretical value.

The input resistance is very small in the vicinity of the resonant frequency of the active differential circuit, so a voltage follower is added between the phase lead circuit and the improved active RC differential circuit [5]. This circuit is composed of AR1. Obviously, adding voltage follower not only improves the performance of the circuit, but also makes the circuit analysis and design simple and easy to adjust [6].

The circuit also needs to be able to automatically adjust the gain of the in-phase amplifier, which is composed of AR3,R_p, R2, R3, D1 and D2. It causes the whole circuit to meet the amplitude condition of the oscillator. At the time of the oscillation, the gain is $|A_0F_0|>1$, and the gain can be adjusted automatically to $|AF|=1$after the oscillation. In this circuit, $F_0=F=1$.

An example-- design of a sine-wave oscillator based on an improved active RC differential circuit

A sine-wave oscillator with a frequency of 100kHz and an amplitude of 1V is required.

The circuit is shown in figure 5. The amplifier is LF353. Set f_T=4MHz，k0=2.5×105. From (4) formula, characteristic frequency can be calculated by the improved differential circuit :

$$f_C=\frac{f_0^2}{f_T}=2.5kHz \tag{7}$$

Considering the load capacity of the op-amp, We take the nominal value : $R=16k\Omega$, $C=3.9nF$. The phase shift of the improved differential circuit is - 90 degrees. Then estimate the quality factor:

$$Q=\frac{k_0\sqrt{\omega_T\omega_C}}{\omega_T+k_0\omega_C}\approx 39.76 \tag{8}$$

Because of $f_1>>f_0$, take the characteristic frequency of the phase lead circuit as follow:

$$f_1\approx 2f_T=80f_0=8MHz \tag{9}$$

It provides the lead phase can be estimated to be:

$$\varphi_1=90-tg\frac{f_0}{f_1}\approx 89.3^o \tag{10}$$

After the circuit is stable, the gain of the amplifier is A3 = 2. The gain of the improved differential circuit at the resonant frequency A2 is about 39.8, $A=A_1A_2A_3$, $F=1$.Because of $|AF|=1$,the gain A1of the phase lead circuit is about 1/80.Considering the capacitance is not too small, we set $R_1=100\Omega$ .After estimation,

$$C_1=\frac{1}{2\pi f_0\times 80R_1}\approx 199nF \tag{11}$$

At the time of phase amplifier start oscillation, $A_{30}=3$, $|A_0F_0|=|A_1A_2A_{30}|=1.5>1$, meet the vibration condition [7]；When stable, $A_3=2$, $|AF|=|A_1A_2A_3|=1$, meet the stability condition.

At this point, resistance capacitance element can set nominal value : $R=16k\Omega$, $C=3.9nF$,

$R_1 = 100\Omega$, $C_1 = 200nF$, $R_2 = R_3 = 10k\Omega$, $R_p = 10k\Omega$,Bias voltage= $\pm 12V$. After connecting the circuit, adjusting the R, the output sine-wave frequency is 100kHz. By measuring we obtain, $R = 16.22k\Omega$, $C = 3.94nF$. When $R_p = 200\Omega$, the amplitude of the output sine-wave is about 0.35V. When $R_p = 4.1k\Omega$, the amplitude of the output sine-wave is about 1V. When $R_p = 10k\Omega$, the amplitude is about 5.8V.

When the output amplitude is 2.5V seen from Figure 6, harmonic distortion is measured with the digital oscilloscope. It can be seen that hardly detected harmonic distortion in the Figure 6 on the right.

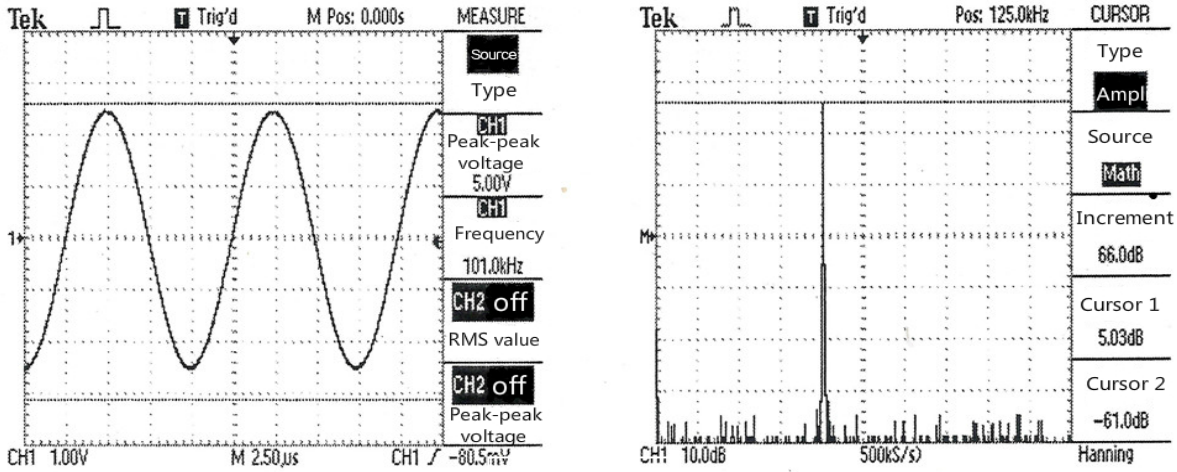

Figure 6

Conclusion

This paper uses modified active RC differential circuit for frequency selecting circuit. By using the RC phase shift circuit, the phase condition of the oscillator is satisfied. With variable gain amplifier, the amplitude condition and stability condition of the oscillator are also satisfied. The frequency of output sine-wave frequency of the circuit is close to the center frequency of the frequency selecting circuit. The quality factor of the frequency selecting circuit is usually greater than 10, so the output harmonic distortion of sine-wave is very small. The oscillation frequency range is at least (0.0001~ 0.1)f_T. The circuit is simple and easy to design and adjust.

The circuit is also suitable to be made into a sine-wave oscillator chip. It is expected to make a cheap, high-performance sine-wave oscillator chip.

References

[1] HUIJSING J H. Operational amplifier-theory and design [M]. tsinghua university press,2006.315-322.

[2] LANGEN K D. HUIJSINGJH. Compact low-voltage power-efficient operational amplifier cells for VLSI [J].IEEE Journal of Solid-State Circuits,1998, 33(10) : 1482-1496.

[3] GRAY P R, HUEST P J,et al. Analysis and design of analog integrated circuits[M]. 4th ed. tsinghua university press, 2008. 361-372.

[4] SALIMI K, KRUMMENACHER F, DEHOLLAIN C, et al. Two-stage high swing fully integrated tunable quadrature sine oscillator[J], IEE Electronics Letters. 2010(8) : 1338-1339.

[5] SCHANERBERGER M,AWAD S S. The implementation of a digital sine-wave oscillator using the TMS320C25: distortion reduction and applications [J]. IEEE Transactions on Instruction and Measurement, 2009, 39(12) : 1240-1244.

[6] DOMINGUEZ M A, AUSIN J L, DUQUECARILLO J F,TORELLI G. A high-quality

sine-wave oscillator for analog built-in self-testing[J]. IEEE Circuits and Systems, 2012 (5) : 3453-3457.

[7] SOLIMAN A M,AWAD S S.A novel sine-wave generator using a single operational amplifier[J]. Proceedings of the IEEE,1978,66 (2): 1666-1668.