The Design of Automatic Temperature and Humidity Recorder

Chen Yu-jie[1, a] ,Liu Pei-xue[1, b], Luo Jin-tao[1, c], Xu Wen-xiu[1, d]

QingDao HuangHai College, Qingdao266427, China

[a]chenyujie_cc@163.com,[b]ytulpx@163.com,

[c]1269329082@qq.com,[d]540362098@qq.com

Keywords： Temperature and humidity, real-time monitor, 485 signal communication, Upper computer

Abstract: Aiming at the problems that the traditional temperature and humidity recording manual operation is low efficiency, put forward a design scheme of temperature and humidity automatic alarm recorder. real-time monitor temperature and humidity sensors using single chip microcomputer technology, after the data is collected and processed, the results is displayed on the LCD screen, at the same time, transmit the data to PC for display through the RS485 serial communication, also The design has the function of data record and historical data inquiry, the host computer remote control and so on, when temperature and humidity exceeds user-set upper and lower limits, the device will automatically alarm.

Introduction

Temperature and humidity measurement is an important part of the modern detection technology, in order to ensure the quality of the products, saving energy and safety production and plays a key role. Therefore, to ensure fast and accurately measuring technology and device for temperature and humidity generally by various countries attention. With the development of communications technology and computer technology, temperature and humidity measurement technology in Japan, Netherlands, United States, Israel and other developed countries has been rapid developed. Now foreign temperature and humidity measurement technology is moving towards the development of high-tech direction, Network technology, remote sensing technology has been gradually integrated with the production activities.

In recent years, China has also increased the research efforts in the temperature and humidity measurement technology, Despite advances in technology, more humane, but there is not remote control the working status of the equipment. This design in the original technical level, has made the further improvement: 1, environmental parameters data processing with higher accuracy requirements, ensure the goods in storage environment, increase the economic efficiency of enterprises; 2, using low power components, the power consumption will be greatly reduced, reducing the power consumption cost; 3, the adjustment of environment monitoring technology, not only can observed the data in the main equipment on the site, but also observation the data in any PC equipped with corresponding PC machine, The parameters of the main equipment, set command to complete the monitoring and control of the combined, largely reduce manpower participation process.

Overall System Design

The system is mainly composed of three parts, data acquisition device, control center, host computer .（ the overall design diagram of the system see Fig. 1).

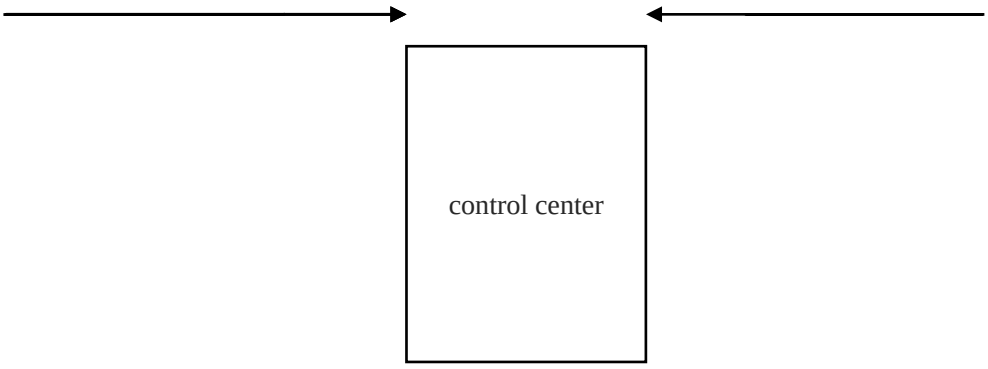

Fig.1 the overall design of the system

Controlled by MCU, the data acquisition terminal using temperature and humidity sensor AM2321 to temperature and humidity data real-time acquisition and the collected data were processed and displayed on the LCD screen, also through the RS485 serial communication would be processed by the data to PC display, when the temperature and humidity exceeds the setting upper and lower limit, the alarm device will be activated.

Hardware Design

The circuit design of data acquisition terminal

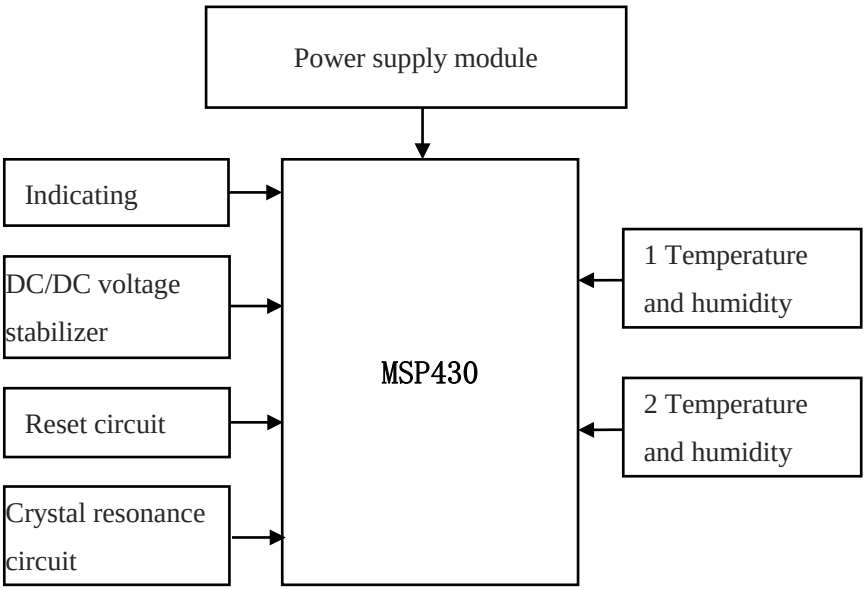

Fig.2 The system block diagram in figure 2 data acquisition

Mainly use the high precision temperature sensor, capacitive humidity sensing element, A/D converter, signal amplifier and a high performance embedded microcontroller integrated consisting of AM2321 temperature and humidity sensor to achieve the data collection. Through the amplifier to collect the data signal stronger than normal, and the conversion of the collected data through the A/D converter in a timely manner, so that the output digital signal is more anti-interference .

Data acquisition in the system block diagram as shown in Fig. 2, the smallest system consists of DC/DC voltage stabilizer, reset circuit, MSP430, crystals circuit structure, etc.

Data display and alarm circuit design

The MSP430 as control center processor, using 2.8 inch alientek TFTLCD liquid crystal module as the display unit, the control center alarm and prompt the user through the buzzer, the NPN triode 8050 as alarm circuit switch, when beep is a 3.3V high level， after the voltage division, the base

electrode of the NPN transistors to obtain a control signal, at this time of the triode three terminal voltage state collector > base > emitter, the triode is make the buzzer sounds, Similarly, when the beep is low level, the buzzer does not ring.

Data display and alarm circuit diagram in Fig. 3.

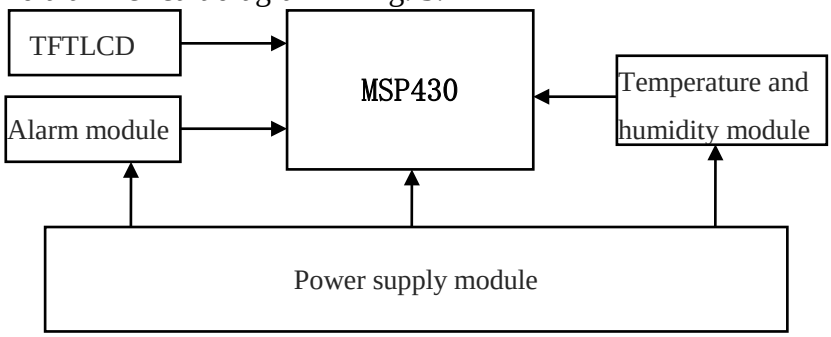

Fig.3 Data display and alarm circuit module chart

SD card circuit design

Control center processor running FatFs system, the system directly mounts the SD card, the operation to achieve the function of local records of the system. The

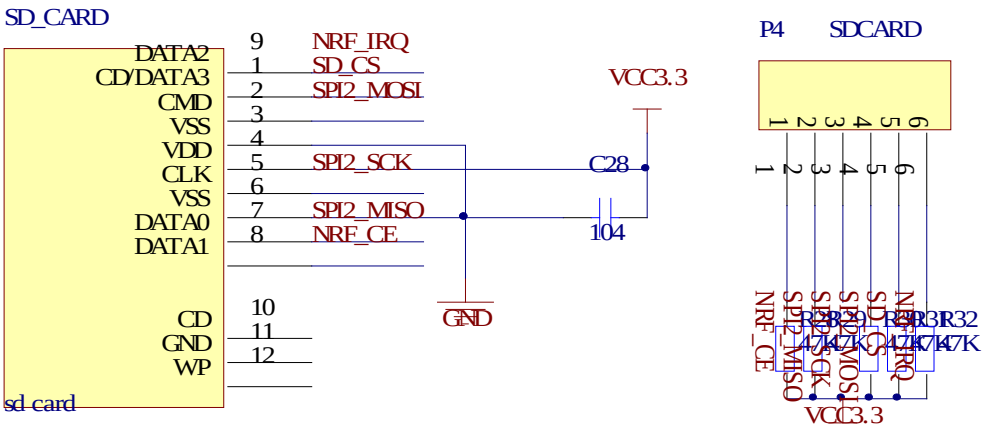

Fig.4 SD card interface is connected to the STM32 schematic diagram

FATFS systems support the size of 1 ~ 32 g SD card. SD card driver circuit as follows in Fig. 4, SD card driver using SPI mode, and the SD card connect to the STM32 processor SPI2, to pull on the control pin to ensure the reliability of communication.

Software Design

The design of the data acquisition terminal program

After acquisition terminal boot device is initialized, it is choose the measurement of temperature and humidity one two road，than all the way began to normal data

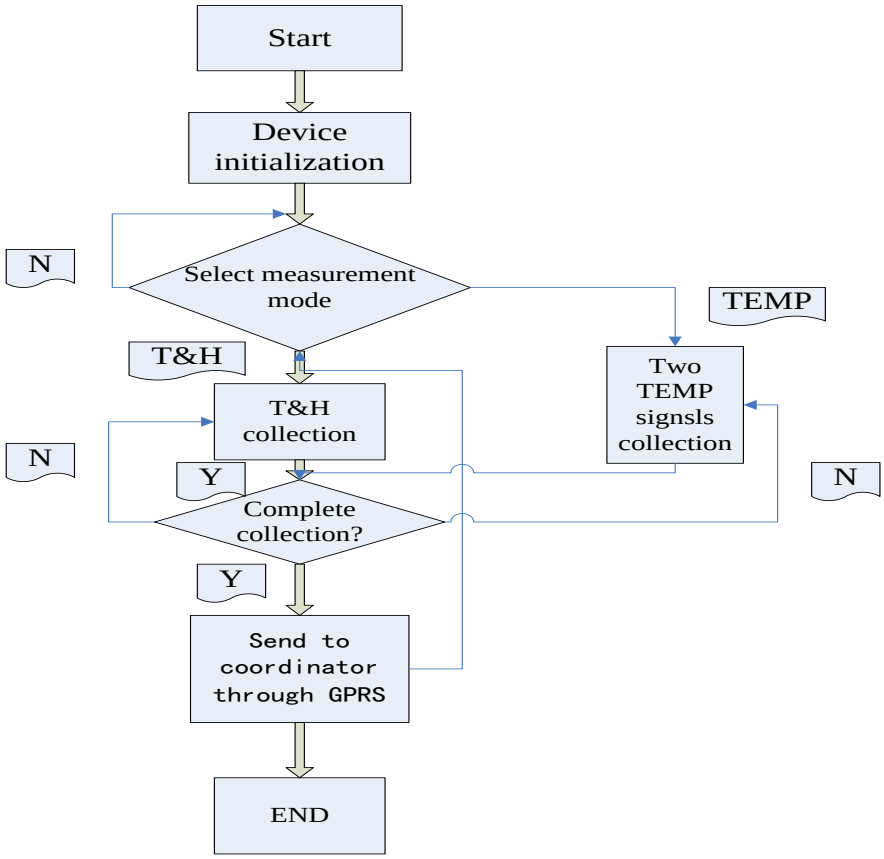

Fig.5 Data acquisition terminal program flow chart

acquisition, the data will be sent to the coordinator via GPRS once the acquisition is complete，than recycle.The data acquisition terminal program flow chart is as follows Fig. 5.

PC software design

The friendly human-computer interaction environment is an important factor of the design. This design uses the Delphi 7.0 provides the users with a vivid, intuitive and easy operation of the upper machine.Delphi7.0 has directly compiled executable code, compile speed characteristics, powerful data access and network development capability, high reusability, scalability, strong support for the access rules are given to the client or server processing of the two programs .The temperature and humidity automatic alarm recorder machine has simple structure, high reliability, low cost, and update speed, system installation process simple, fast and convenient.

As show in the function, Temperature and humidity automatic alarm recorder PC can real-time query real-time data of the specified recorder, To control the change of the field test data at any time; Receive the alarming signal from the recorder, the first time to understand the scene situation and timely deal with emergencies; Remote setting the alarm of the specified data recorder and the alarm function of the specified recorder is opened or closed. It is can be widely used in the areas，such as cold storage, food, storage of vaccines which temperature and humidity parameters need to monitored.It can significantly improve the effect of management， make up the design only with data collection and processing, but without remote control terminal in the market.

System Test

To deploy a PC machine with a host computer program, a development board with a liquid crystal display screen, and a collection of 10 environmental parameters In a laboratory ， test the data transmission rate, power consumption and communication distance of the system.

By statistics,it is 1-3 second for the host PC to sends command and receive the measurement parameters from the 10 collector, with a success rate of 100%.

The part of the collection and the results are shown in table 1, the test results show that the system has high stability and security.

Table.1 part data collection table

Time	Collector No.	Temperature	Humidity
10:23:05	01	2.0	43%
10:23:05	02	2.0	43%
10:23:06	03	2.0	43%
10:23:06	04	2.0	43%
10:23:07	05	2.5	43%
10:23:07	06	2.5	43%

Conclusion

The system has realized the real-time monitoring of temperature and humidity data, processing, transmission, and the function of human-computer interaction. The whole system uses modular design, hardware structure is simple and convenient wiring, software function is perfect, with systematic upgrading, improve the efficiency of the workers, reduces the cost, will significantly improve the traditional temperature and humidity data processing work.

The project name and number: Based on the Zigbee network of key techniques of sea cucumber aquaculture water quality monitoring(J14LN82)

References

[1]Harry K.H.Chow, et al. Design of a RFID case-based resource management system for warehouse operations[J]. Expert Systems with A pplications 30 (2014),561 -576.

[2]Lu Suhong,Ma Fei. The application of the portable temperature and humidity detector [J]. Journal of henan agricultural university，2013，47(2):162~166

[3]Yang Yi. Research on the greenhouse environment management system [D]. Shanghai: East China University of Science and Technology，2012

[4]Feng Liang. Research and system design of low power storage temperature control system [D]. Shandong: Shandong University，2014

[5]Yang Wei,Gao Wenhua, Luo Hongda, etc.. Design and research of temperature and humidity monitoring system based on ARM [J]. Journal of electronic design engineering，2014,21(3):47~49

