The Research on a New Method of Fault Diagnosis in Distribution Network Based on the Internet of Information Fusion Technology

Yanjie Wu[1]，Duolong Wu[2]，Jianfeng Li[3]，Pan Zhu[4]

Faculty of Physics and Optoelectronic Engineering, Guangdong University of Technology, Guangzhou 510006, China

[1]wuyanjie@gdut.edu.cn, [2] edlwu@gdut.edu.cn, [3]li.jf01@gdut.edu.cn, [4]eduzhupan7807@163.com

Key words: fault diagnosis, internet of things, information fusion, power system and its automation control , smart grid

Abstract: The method of fault diagnosis for distribution network has always been one of the research hotspots in the fied of power system and its automation control. With the rise of smart grid, how to realize the intelligent operation and management of distribution network line, as the last mile of power supply in power system, has become a key issue. This paper puts forward a new method of fault diagnosis in distribution network based on the internet of information fusion technology, and designs a integrated fault diagnosis system.

Introduction

In recent years, with the development of modern electronics, communications and computer technology, the automation technology of distribution network has obtained rapid development. the gradually improved of teleindication, telemetering and remote control function can not only monitoring at real-time and automatic protection for distribution network under the normal and fault conditions, but also provides technical support for the establishment of big data platform[1,2].

In consideration of the development of fault diagnosis system for distribution network, the current research in this filed has the following problems:

1) There are many information resources, but far from perfect

With the acceleration of digitization and informatization process, and the installation of terminal devices in our distribution network, When the system is in trouble, there will be a large number of alarm data reported to the distribution network in a short time，such as fault recorder data, the alarm of protection device, switch trip data, etc. Both the data quantity and the fault information is abundant, which are good at diagnosing the fault of distribution network over many kinds of data, but need to do the work of fusion different data and the screening of abnormal data. At the same time, it should be noted that most of the current online collection data is feeder line data; however, the feeder line lacks the online monitoring equipment. For complex distribution network, the traditional diagnosis scheme can only give a rough fault area. How to layout the monitoring equipments, perfect the distribution information collection and improve the accuracy of the fault diagnosis is a subject in front of the researchers.

2) The scope of fault diagnosis and fault characteristics is not clear.

During the operation of distribution network, magnetizing inrush current, load, lightning and transient faults, stealing electricity caused by the change of the signal curve, which contains current, voltage and other important parameters. There are a lot of factors that lead to this result; these factors can reflect the power grid operation state. At present, all researches on the range of

distribution network fault diagnosis is not unified, the classification of the fault state is not clear, corresponding to the normal running state , the characteristics and internal factors of fault state also lack of systematic study. It is necessary to analyze and classify the operation data of a large number of distribution networks, and form a set of distribution network operating characteristics of the gene pool, which can provide strong data support for the establishment of failure mode, fault modeling and the system fault analysis in the future.

3) The realization of intelligent fault diagnosis system

The fault diagnosis of distribution network is a solving process that has multi level and multi category problem, which needs to use the data of multiple information systems. Therefore, in the construction of intelligent fault diagnosis system, all of the communication, data acquisition, data feature extraction, fault diagnosis algorithm selection and the interface with other systems, and other aspects of the problem should be considerate.

Application of information fusion technology in Internet of things

The internet of things is a new network that connects all kinds of items with the internet through different sensing devices, and has been considered as the new engine of world economic development, it will accelerate the development of information industry in-depth direction. Although many experts have different understanding of the internet of things [3], there are five three-dimensional structure in the internet of things that have reached a consensus: perception layer, access layer, network layer, support layer and application layer.

There are many key technologies in the application of internet of things, while the information collection is the cornerstone, data mining and analysis based on the collected information is the key to achieving all walks of online monitoring, fault diagnosis and operation management.

For the intelligent and realistic demand trends of internet of things, around the application of running status and fault diagnosis of distribution network lines, this paper presents a method of rapid identification and fault location through intelligent algorithms in the type of distribution network fault, which is based on an automated information collection, fault recording, protection alarm, switch trip data. This method can be achieved by running with all aspects of the power system and quickly locate the fault in the case of coordination and optimization, isolation, recovery, so as to provide high quality and reliable power.

Information Collection

Due to the impact of the external environment, the failure rate of distribution network lines is the highest, while its fault diagnosis and localization is the most difficult. Thus, the following research target is focus on the distribution network overhead lines.

Modern control theory pointed out that if you want to achieve effective control of a system, you must observe the system firstly. Sensing and measuring technology play an important supporting role in power monitoring, analysis and control of the distribution system. So, we must look for the data source that can reflect the state of lines running before achieve the accurate monitoring. Currently, the data source for the distribution network line can be obtained mainly from two aspects:

Substation: Not subject to communication, power, space and other conditions, high frequency sampling can be carried out, and the sampling precision is relatively high, which ensures the data quality of the data source, moreover, it can truly reflect the operation of the distribution network feeder. These monitoring methods are still limited to the substation, however, the majority of faults

or anomalies with the power grid lines appear outside the substation, the diagram of substation wave recording system is shown in fig.1.

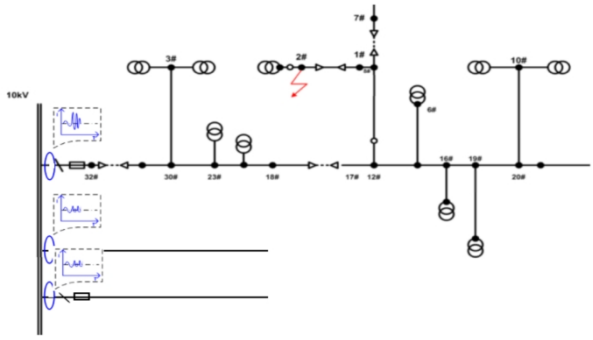

Fig.1. substation wave recording system

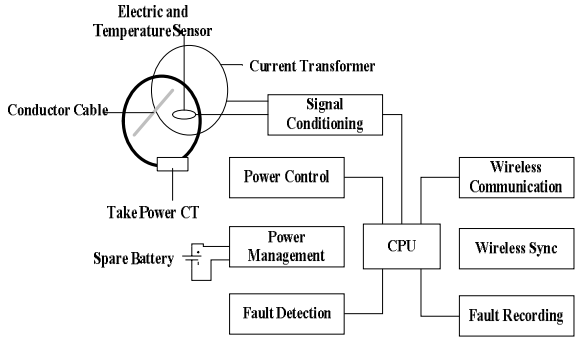

Fig.2. block diagram of the new sensor

Substation external: Currently, the data source that we can get mainly from distribution automation terminal [4], fault indicator and distribution transformer metering terminal. Among them, the distribution automation terminal mainly installed in the trunk, the data can be provided primarily contain the effective value of load and switch operation information; Fault indicator can be covered branch lines, but it only detect the circuit whether trip or not; Distribution transformer metering terminal mainly for electrical terminal, power, load statistics and analysis. Even though it can cover most of the area with the grid through the combination of these three methods, it is not reality in solving a variety of complex conditions and distribution network fault.

Now, with the substantial input in feeder automation equipment, which make a greater contribution in troubleshooting the distribution network lines, but due to the high price and limited to the line's geographical environment, communications infrastructure and other conditions, it make the lines mainly installed in the trunk. However, with a complex power grid structure, branch lines and more particularly, and the length of some branch lines longer than trunk length. Therefore, even if use the FTU put the trunk into three or four sections, it will takes a long time to find out the fault when a failure occurs, and it can analyze the reasons and fault repair only after the staff arrive to the point of failure, which takes a long time, and affects the reliability of power supply.

With the rapid development of semiconductor and wireless communications technology, it is possible to design and research the new distribution network overhead line wireless sensor. This paper proposes and designs one, the block diagram is shown in fig.2, and scenes work schematic is shown in fig.3.

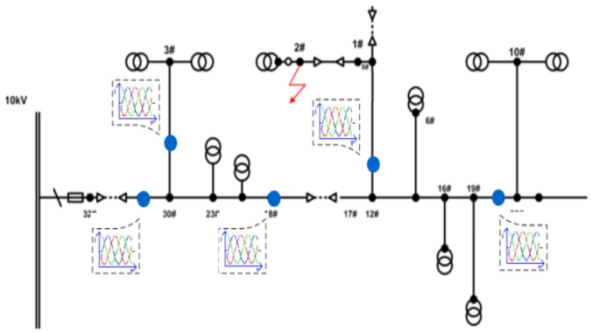

Fig.3. The new sensor works schematic scene

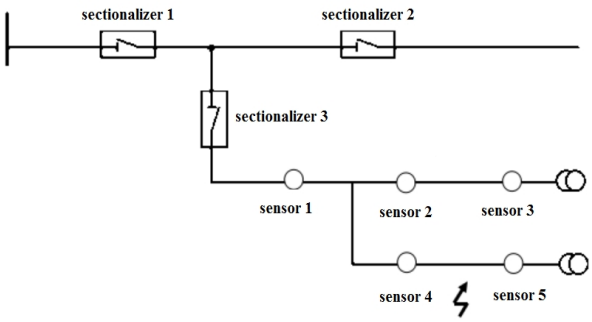

Fig.4. FTU equipment integrated with new sensors

Such wireless sensors positioning clearly, only use for collecting data, so its shape structure and installation style are similar to fault indicator[5],but it has great price advantage compared with the FTU equipment, so its specific application includes the following two operating modes:

a) When the main trunk line has been installed FTU and other equipment in distribution network, its main branch lines covering, especially at higher long lines, the failure rate of the branch line, which is used for monitoring the operation of branch lines.

b) In the case of no FTU equipment, and economic or installed conditions are not allowed, it can also completely covered by the trunk and branch lines.

Because it does not participate in the control device that is equipped with a switching network lines, so there is no fault isolation.

In summary, under the conditions permit, using the FTU switch equipment for the dividing of main trunk line in distribution network, and other main trunk lines section and all branches of the installation of newlines distribution network of wireless sensors. Through effectively combine the two, we will achieve all lines of distribution network for monitoring the operation lines, and build up a powerful data acquisition platform for the next data fusion analysis. Fig.4 shows the two operating modes after synthesis, wireless sensors (referred to as sensors) installed in the branch line, and FTU voltage switchgear (sectionalizer) mounted on the trunk line. When the fault occurs, the segment 3 complete fault branch cut from the new distribution line, sensor 1-5 use to determine the specific fault zone.

Data Mining and Analysis

The data collected by the sensor network and the status value (0 or 1) of digital switching are utilized to improve diagnosis intelligence of the distribution network. Moreover, in order to restore the fault of distribution network quickly; it takes a variety of data analysis and mining of three-phase current, three-phase electric field strength and temperature which are collected by wireless sensor networks.

Several common data processing methods include time domain, frequency domain and time-frequency domain composite processing technology. Signal time-domain analysis, also known as waveform analysis or time-domain statistical analysis. It can calculate signal mean square value, variance and other statistical parameters by the signal time-domain waveform. Time domain analysis methods include statistical analysis and correlation analysis [6]. If the signal is difficult to analyze in the time domain, we can usually convert it to a certain transform domain and then analyze it in the transform domain (common frequency domain). Signal spectrum is the description of the distribution of the original signal in the frequency domain, which can provide more intuitive feature information than the time-domain waveform. Spectrum analysis commonly includes amplitude spectrum and power spectrum. The latter shows the distribution of vibration power and the former is the amplitude corresponding to each frequency harmonic vibration component which is used more intuitively, and the line height of amplitude spectrum is the amplitude of the frequency components.

However, the signal frequency domain which is generally based on the Fourier transform represents the frequency domain distribution which reveals the signal characteristics in the frequency domain, but the Fourier transform is a unitary transform which only can understand the overall characteristics of the signal but can’t detect the signal effectively in frequency with time. Only combine the time domain and frequency domain can it rather reflect the characteristics of non-stationary signals. At present, time-frequency analysis methods include wavelet transform, S

transform and HHT transform, which are extensively researched in the fault diagnosis in the power system of power quality testing, and have achieved some research results [7-9].

Based on the new collection system of above distribution network line, this paper introduces two methods: matrix method and correlation analysis.

Matrix method: In a single power distribution network, the characteristic is one-way flow. We regard the fault monitoring points and switches as nodes, and each zone number are shown in Fig.5. The circled digitals in the figure represent zone number while others are node number. So, how many nodes should be able to determine the corresponding feeder area, each node corresponds to a unique input point on a given region. A region likely to be a general line segment, it also may be T-node area or peripheral area of the feeder.

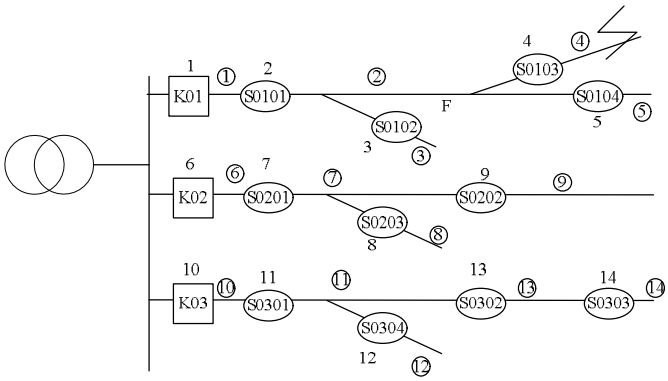

Fig. 5. Regional division schematic of the distribution line fault simulation

Using this model, the network correlation described matrices D can be generated, which each row corresponds to a feed zone, each column corresponding to a switch or a wireless sensor (node), and then d_{ij} is defined as follows.

$$d_{ij} = \begin{cases} 1, & j \in i \\ -1, & j \notin i \\ 0, & j \not\subset i \end{cases} \tag{1}$$

Where $j \in i$ represents node j is in point of the feeder area i, $j \notin i$ represents node j is out point of the feeder area i, and $j \not\subset i$ is that node j is not connected with the feeder area i. According to this method, the described matrix D of the formula (2) is shown as follows:

$$D = \begin{Bmatrix} 1 & -1 & 0 & 0 & 0 & 0 & 0 & 0 & 0 & 0 & 0 & 0 & 0 & 0 \\ 0 & 1 & -1 & -1 & 0 & 0 & 0 & 0 & 0 & 0 & 0 & 0 & 0 & 0 \\ 0 & 0 & 1 & 0 & 0 & 0 & 0 & 0 & 0 & 0 & 0 & 0 & 0 & 0 \\ 0 & 0 & 0 & 1 & 0 & 0 & 0 & 0 & 0 & 0 & 0 & 0 & 0 & 0 \\ 0 & 0 & 0 & 0 & 1 & 0 & 0 & 0 & 0 & 0 & 0 & 0 & 0 & 0 \\ 0 & 0 & 0 & 0 & 0 & 1 & -1 & 0 & 0 & 0 & 0 & 0 & 0 & 0 \\ 0 & 0 & 0 & 0 & 0 & 0 & 1 & -1 & -1 & 0 & 0 & 0 & 0 & 0 \\ 0 & 0 & 0 & 0 & 0 & 0 & 0 & 1 & 0 & 0 & 0 & 0 & 0 & 0 \\ 0 & 0 & 0 & 0 & 0 & 0 & 0 & 0 & 1 & 0 & 0 & 0 & 0 & 0 \\ 0 & 0 & 0 & 0 & 0 & 0 & 0 & 0 & 0 & 1 & -1 & 0 & 0 & 0 \\ 0 & 0 & 0 & 0 & 0 & 0 & 0 & 0 & 0 & 0 & 1 & -1 & -1 & 0 \\ 0 & 0 & 0 & 0 & 0 & 0 & 0 & 0 & 0 & 0 & 0 & 1 & 0 & 0 \\ 0 & 0 & 0 & 0 & 0 & 0 & 0 & 0 & 0 & 0 & 0 & 0 & 1 & -1 \\ 0 & 0 & 0 & 0 & 0 & 0 & 0 & 0 & 0 & 0 & 0 & 0 & 0 & 1 \end{Bmatrix} \tag{2}$$

Obviously, each row only has one "1" element, which corresponds to the entrance point; each line element "-1" is linked to the exit point of the row corresponding to the region, which the number of, how many the exit point, reflect different feeder area types. For example, there are *T* junction feeder area, general line segment and peripheral feeder area. According to the corresponding information reported by fault monitoring point indicator, the fault information matrix G is obtained by whether exceeds the set value information, whose elements(j=1, 2,…,n) can be defined as follows:

$$g_j = \begin{cases} 1, & node\ j\ has\ gone\ through\ fault\ current \\ 0, & node\ j\ hasn't\ gone\ through\ fault\ current \end{cases} \tag{3}$$

Supposing the feeder area ④ doesn't work at Fig.5, the corresponding error message vector is G = [1 1 0 1 0 0 0 0 0 0 0 0 0 0].

We can speculate it to the entire network topology through the physical meaning of the network described matrix and fault information matrix. We are only care of the fault monitoring point device and feeder area where flows through the current rather than the rest of the current wireless sensor or feeder. The regenerated network is associated with the described matrix, which actually reflects the topological connection between the feeder area where only retains the fault current and the corresponding point of the device, that is to say, failure determination matrix.

Descriptive matrix multiplied by fault information matrix equals the fault judgment matrix P, that is, $P = D * G$. If the elements P_j in P are 1, the physical meaning is that the fault current flows only through the entrance point instead of the exit point in region j, so we can determine the fault feeder area j. If P_j are zero, the physical meaning is that the fault current flows into the region from the entrance point of j and outflow from the exit point, it is determined that region j has no fault.

If the fault occurs in the location area shown in Fig. 4, then G = [1 1 0 1 0 0 0 0 0 0 0 0 0 0] T, and $P = D * G$ = [0 0 0 1 0 0 0 0 0 0 0 0 0 0] T, so it can be determined that the fault zone 4, consistent with the hypothesis

Correlation analysis: Correlation analysis shows the value correlation degree between two time series and the same time series at different times, that is to say, the cross-correlation function is to describe the random signal x(t) and y(t) at any two different times $t_1$and t_2. While the autocorrelation function is to describe the value correlation degree of the random signal x(t) at any two different times t_1 and t_2. Cross-correlation function gives a judgment index whether two signals are related in the frequency domain, which links two signal cross-spectral with respective. It can be used to determine how much the output signal from the input signal, which helps effectively to correct the error generated by the installment of the sources of noise in the measurement .

The definitions of the custom and cross-correlation function are as follows: Supposing the original function is x(t), the autocorrelation function is $R_{xx} = x(t) * x(t-t)$, where $*$ denotes convolution, t represents lag time. If two functions are the x (t) and y (t), the cross-correlation function is $R_{xy} = x(t) * y(t-t)$, which reflects the match extent of the two functions at different relative positions.

The simulation model is the four distribution network architecture at 10kv, which is grounded by the arc suppression coil. Under this system, single-phase ground were to set up respectively (high resistance grounded 500Ω/100Ω, low-impedance grounded 0.5Ω /1Ω), phase short circuit, phase short circuit grounded (1Ω/direct grounded), disconnection (single-phase wire, two phase disconnection) six kinds of fault types, as well as there are three conditions, inrush current, large

motor starting, large capacitor switching (1.5M Var). Fault time is set at a random time t_1 and a time after t_1+1/4T (T: cycle). Network structure and simulation are shown in Fig. 6.

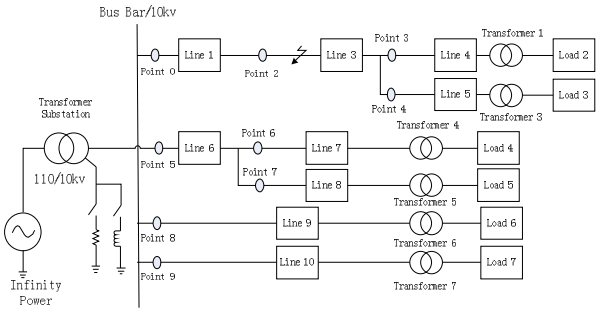

Fig.6. Experimental simulation grid structure diagram of correlation analysis

The simulation waveform before and after the point of failure as shown in Fig.7

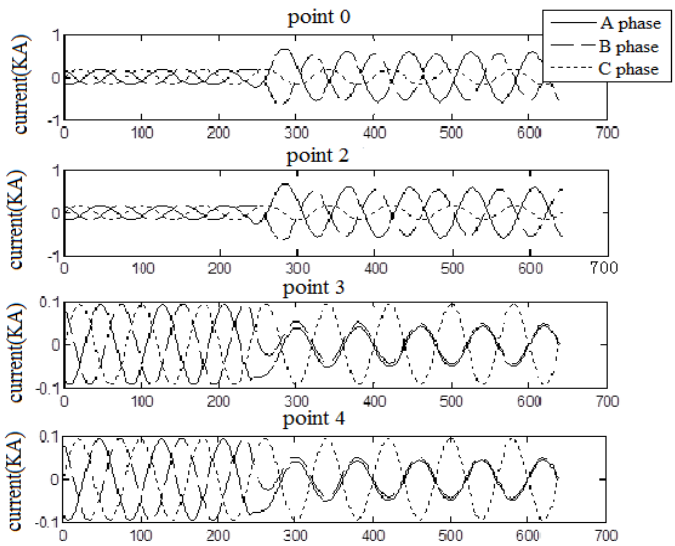

Fig.7. Three-phase current around the fault point

Fig.7 shows that the fault phase currents become large before the fault point and small after the fault point and non-fault phase current is constant when AB two-phase short circuit. The zero-sequence current waveform is very similar detected by the detecting point 0 before the fault point and the point 2; while the waveform is similar detected by the detecting point 3 after the fault point and the point 4. However, the waveforms vary greatly between monitoring point 2 and 3, indicating that the fault occurred in the middle of both.

We have the conclusion through the above two methods. Feeder automation terminal FTU and wireless sensor are seen as a wireless sensor node to collect data, and the fault can be accurately determined and located through the data and the appropriate algorithm.

Fault Diagnosis System

This paper also designs an intelligent diagnostics and utility model for distribution lines, the overall structure shown in Fig.8, including record wave library, characteristics of the gene pool and intelligent fault diagnosis expert system. Among them, the gene pool is a core feature of the system; it contains a distribution network fault conditions, gene and reasoning mechanism. Characterized

gene library includes feature extraction algorithm base, rule base and rule detection algorithm library.

Feature Extraction: First need to determine the input, the input may be the data of one monitoring point and its combination, it can also be the data of multiple monitoring points and its combination, it can be divided into single-point, two-point or multi-point model; Secondly, need to determine the output, namely feature quantity. Feature extraction methods mainly contain the statistical analysis of the time domain, frequency domain harmonic analysis and time-frequency domain analysis.

Rule Design: First need to determine the characteristic quantities, which is a measure of the distribution network operating conditions, in other words, we should know what features can be judged by the distribution network operating conditions. The feature quantity extraction related to algorithm; secondly, the rules of inference mechanism need to be determined, which is the basis for fault classification.

Rule Check: According to the rule, if we input the feature values, output will match the results. The input feature values can be calculated in real time by the feature extraction algorithm, and can also be extracted by historians, but they should be calculated in advance and stored.

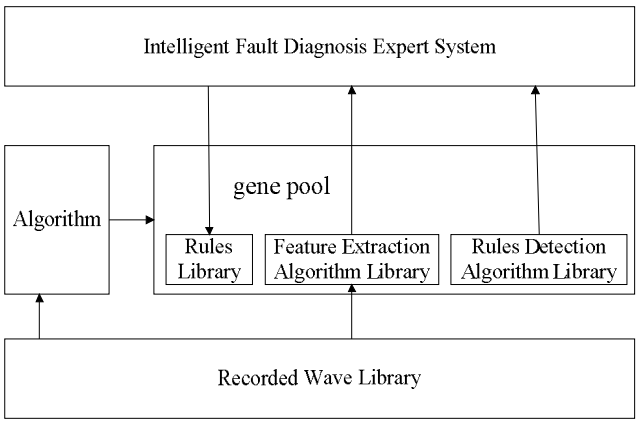

Fig.8. Fault Diagnosis System Model

When the scene has abnormal conditions, record wave system can trigger matters, the data of three-phase voltage $\boldsymbol{U}_a$, $\boldsymbol{U}_b$, $\boldsymbol{U}_c$ (or electric field strength $\boldsymbol{E}_a$, $\boldsymbol{E}_b$, $\boldsymbol{E}_c$) and three-phase current $\boldsymbol{I}_a$, $\boldsymbol{I}_b$, $\boldsymbol{I}_c$ that collected by fault recorder will be uploaded to recorded wave Library, relevant monitoring data to be queried and extraction by the diagnostic system, extract the feature of currently running lines through feature extraction algorithm. By the rules of detection, identification and fault location to achieve operating conditions.

Conclusion and Outlook

Based on the technology of the internet of things, using of distributed(spatial domain), and the rich operating status information that contained by the high frequency wave recording(time domain) signal, Integrating of different diagnostic algorithms, this paper preliminary test the methods of fault diagnosis and localization ,which use of the switch and recorded data in distribution network line. In addition, a fault diagnosis system model based on this method is proposed.

With the constant improvement of algorithms and Systems, this research results will play a positive effect on the domain of monitoring of the new energy access, auxiliary power quality analysis, as well as for the surrounding environment monitoring of distribution network lines.

Acknowledgements

This work was financially supported by the Guangzhou Scientific Research Projects (14ZK0093), Guangdong University of Technology Youth Foundation (15ZK0038) and Guangdong Province Academia research (14ZK0184).

References

[1] Kui Wang, Ying Sun. Automation of Electric Power Systems [M]. Beijing: China Electric Power Press, 2004.

[2] Zhengyou He. Distribution Network Fault Diagnosis [M]. Chengdu: Southwest Jiaotong University Press, 2011.

[3] Yingqin Xu, Linbo Xie. Discussion of the key technologies and main problems of IOT [J]. Industrial Instrumentation and Automation, 2011(2):10-12.

[4] Moufa Guo. Distribution Automation Technology [M]. Beijing: Machinery Industry Press, 2012.

[5] Bin Zhang, Qincheng Yuan et. Situation Analysis of the distribution line fault indicator [J]. For electricity, 22(5): 29-30, 2005.

[6] Dazheng Wu, Linyao Yang, Yongrui Zhang. Signal and Modern System Analysis [M]. Beijing: Higher Education Press, 1998.

[7] S. Santoso, R.C. Dugan, J. Lamoree and A. Sundaram, Distance estimation technique for single line-to-ground faults in a radial distribution system. Proceedings of IEEE Power Engineering Society Winter Meeting, 2000, vol. 4: 2551-2555.

[8] L. Peretto, R. Sasdelli, E. Scala and R. Tinarelli, Fault location method integrating a distributed measurement system and wavelet analysis. Proceeding of IEEE Instrumentation and Measurement Technology Cofference, 2007: 1-6.

[9] Qing Zhong, Rui Li et. A Practical Method for 10kV Overhead Line Fault Detection and Location Advances in Power and Electrical Engineering, 2013:1804-1808.