The Distilled Characteristics Analysis of Olive Brandy

Ji-Tian SONG[1*], Xi CHEN[1], Hong KAN[1], Wen-Chao WANG[1], Yu-Chen SONG[1], Wei TIAN[1]

[1]College of Mechanical Engineering, Tianjin University of Science and Technology, Tianjin China

*Corresponding author

Keywords: Olive brandy, Distillation, Aroma.

Abstract. There will be a lot of fragrant component loss and damage in the distillation process of olive brandy, which influences the quality of brandy seriously. In order to obtain good quality brandy, the effects of different distillation temperature are studied. It is found that the most suitable temperature for olive brandy distillation is 150℃. The kinds and content of aromatic constituents in brandy are analyzed at the best distillation temperature. The aromatic ingredients in brandy from the mixture are the most. The highest content of brandy made of olive juice is esters.

Introduction

The olive brandy distillation can be used for not only athe purpose of purification, but also many aromatic ingredients loss in the fermentation process. Lots of aromatic ingredients will disappear. The volatile substances in brandy materials can be distilled from raw olive wine on not only its boiling point,but also the distillation coefficient. Zhang Tianyi analyzes the change rule of higher alcohols in the distillation process. CuiYan's study pointed out that the most higher alcohols will shift to the original brandy in the distillation process. It has a great influence on olive wine quality that the wine head and feints in the brandy distillation process, such as being high in the wine head and feint of methanol and low in the wine body. Generally, it is esters substance as being the most species and highest concentration chemical composition in olive brandy. Alcohols and acids are also an important part of olive brandy. One of the highest content is ethyl. There are several highest volatile aroma components, such as isobutanol, ethyl acetate, ethyl octylic acid, succinic acid diethyl ester, and decanoic acid ethyl ester.

Experimental Equipment and Method

Experimental Equipment

All glass distillation bottle (1000ml); stainless steel fermenter (50L); cylinder (500ml); WF-2000 juice extractor;digital display thermometer (GuangZhou XuZhong Food Machinery CO. , LTD); refractometer; double-deck stainless steel steamer of HuiMJ; Gas chromatograph-mass spectrometer(GC-MS; American Varian Co.); 65μm extraction head; water bath.

Experimental Method

The full glass distiller has better thermal effects, which can accurately produce the liquor yield of olive brandy and the changing rule of the alcohol degree. The temperature delayed effect is weak. It's suitable for the study of the olive brandy distillation temperature for the liquor yield and the influence of the alcohol degree.

The primary distillation equipment is an all glass distiller for this experiment, using oil bath pot to heat transfer by heating conduction oil, adopting digital thermometers to measure temperature of the distilled liquid. It can facilitates real time record for the distilled liquid temperature. In this experiment,the distillation temperature range is 130℃~180℃ and the interval is 5℃ using the measuring cylinder volume out of alcohol,once every 4 min sampling. A handheld wine degree refractometer is used to determinate the alcohol content.

We studied the variation of the olive brandy liquor yield with the alcohol degree by the different distillation temperature in this experiment, which determined the distillation temperature for the highest liquor yield. Then the variation of aroma components in olive brandy is studied through the different materials by the distillation temperature of the highest alcohol rate. The experiment process is shown in Fig. 1. In this experiment, in order to study the influence of different distillation temperature on olive brandy out, we introduce the concept of liquor yield. Namely, the volume ratio of the pure distilled alcohol and the initial material pure alcohol in the *i* times:

$$R=Vi/V0\times100\ \% \tag{1}$$

R ----- the liquor yield of olive brandy, %;
Vi ----- the distilled pure alcohol volume in i time, ml;
Vo-----the initial material pure liquor volume in i time, ml.

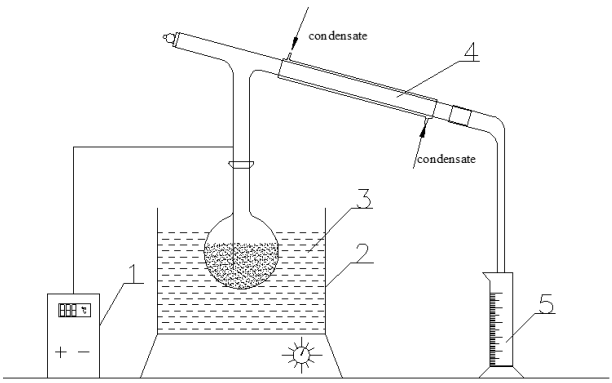

1. Digital display thermometer 2. Oil bath pot 3. The heat conduction oil
4. Full glass distiller 5. Measuring cylinder

Figure 1. Schematic diagram of distillation apparatus

Experiment Results and Discussion

The Change of Olive Brandy Total Liquor Yield

Fig. 2 shows the change of total liquor yield for olive brandy with the distillation temperature. The olive brandy liquor yield increases with the rising distillation at lower distillation temperature.Its yield can be up to the maximum of 43 %, when the distillation temperature is 150 ℃. Since then,its yield reduced gradually with the distillation temperature increasing. This is because the easy volatile component of fermentation medium obtained enough mass transfer power under the lower distillation temperature. The materials are mainly alcohol and other volatile constituents being distilled. Then the difficult volatile components also obtain certain mass transfer power by improving the distillation temperature. The moisture in fermented liquid of high boiling point are also beginning to evaporate and, the volatile

substances are diversified. As a result, the volatile components were diluted, which leads to reduction of the relative alcohol quantity from being distilled.

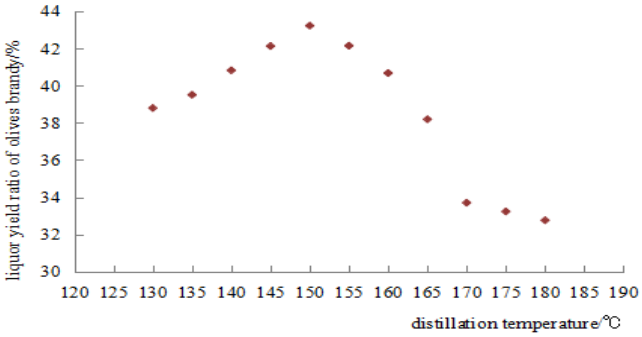

Figure 2. Variations of the liquor yield of olives brandy by the change of distillation temperature

The Change of Olive Brandy Liquor Yield in Different Distillation Temperature

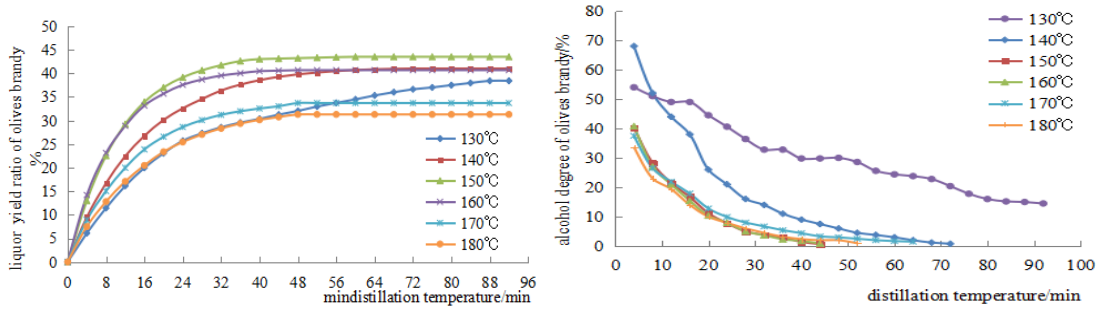

3(a) 3(b)

Figure 3. Variations of the out liquor rate and degree of alcohol of olives brandy by the change of distillation temperature

Fig. 3(a) shows the change of olive brandy liquor yield with the change of distillation temperature. The staring time is the beginning output distillation liquor of olive brandy in this experiment, one sample taken for every 4 min. At the beginning of the distillation, its yield keeps rising under the different distillation temperature, then its yield was entering into balance. It reached the peak with the progress of distillation and then, it's difficult to be distilled out in the fermentation liquid. At the same time, under the same temperature, its yield is falling with the distillation, tending to zero finally. This is because in the early stages of the distillation, the fermented liquid has high alcohol concentration. The alcohol obtains enough mass transfer power from the volatilization in fermented liquid. Along with distillation progress, the alcohol components reduced gradually and the mass transfer driving force gradually declined. As a result, the output rate of liquor gradually declined. When the concentration of alcohol in fermented liquid dropped to the critical value, it is difficult to produce the steam from the fermented liquid of alcohol component, and the distillation rate tends to zero.

The Variation of Olive Brandy Alcohol Degree

In the brandy distillation process, the alcohol will not only change with distillation time, but also changes with the distillation temperature. The changing profiles of the olive brandy alcohol with distillation temperature are shown in Fig. 3(b):

Brandy alcohol degree shows the different patterns with the change of distillation temperature. The alcohol degree is higher, up to 70°, at the beginning of the temperature of 140℃. Then the degree declines gradually, finally reduces to zero.

Olive brandy degree is higher at lower distillation temperature and the corresponding capacity is low. This is because the driving force for mass transfer is small in the lower distillation temperature, which results in the low distillation coefficient. The hard volatile component stay in the liquid phase of fermentation and the distilled components are mostly volatile components. Alcohol is a volatile component, so the alcohol degree is higher at a lower temperature. Distillation temperature is low and mass transfer driving force is low, so the distilled olive brandy amount is small. With an increasing in distillation temperature, the alcohol degree is not obvious and the corresponding capacity for liquor is higher. This is because an increase of distillation temperature leads to the mass transfer driving force being increasing gradually and the distilled brandy increases at the same time. However, the distillation coefficient change is very small. Hence, the alcohol degree change is not significant. When the distillation temperature continues to rise, the distillation coefficient is becoming larger. The volatile components of distillation in other materials are greater than the alcohol components, so the corresponding capacity is low.

Different Olive Yeast Aroma Components of Distillation Process

In this experiment, it is found that the numbers of aroma components are 46 and 66 for the juice yeast and pomance yeast, respectively. For the mixed juice and pomance yeast, the number of aroma components reaches 69 in this case. The contrast of yeast and brandy final product for aromatic component is shown in Fig. 4.

It can be seen from Fig. 4 that the three kinds of yeast in aromatic ingredients have different degree of loss in the process of distillation. Juice yeast aromatic components' loss is the most serious in the distillation process, which contains 23 kinds, loss rate reached 23.3%. Pomance yeast aromatic components' loss is 4 kinds and its loss species is the minimum in this case. The mixture yeast's lost is 5 kinds with losing species being relatively small.

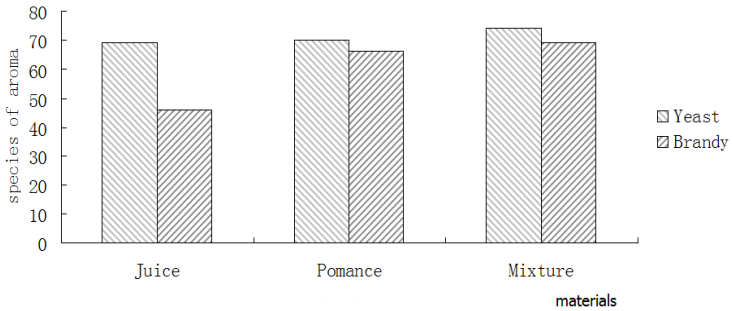

Figure 4. The aroma species contrast in the fermentation products and products wine

The Variation of Aromatic Components in the Juice, Pomance and Mixture Yeast Distillation Process

The severe loss of aromatic is juice yeast in the distillation process, which contains 23 kinds, the variation of aromatic components shown in Fig. 5 (A1 and A2). Esters substances decreased significantly in the distillation process and its relative percentage is 68% in olive brandy wine product, accounting for the most fragrance. A rise of alkene material is more and its relative percentage is only 8.6 %. Alcohols rise is more and its percentage is 19.7%. This three kinds of material in olive brandy wine accounted for 96.3 % of the total aromatic components, composed of the vast majority of aroma components.

There are 4 kinds of aromatic components loss of pomance yeast in the distillation process, loss types being the minimum in this case. The variation of aromatic in pomance yeast in the distillation is shown in Figure 5 (B1 and B2).

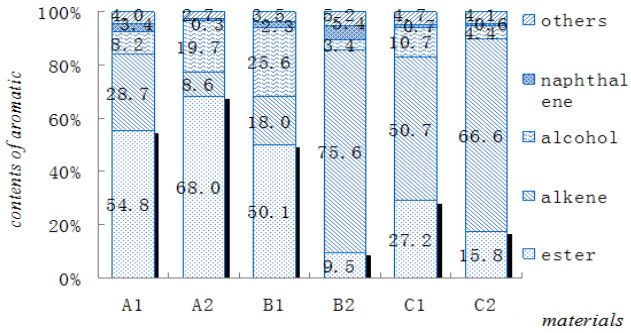

Note: A1,A2: juice yeast and products wine; B1,B2: pomance yeast and products wine; C1, C2:mixrure yeast and products wine.

Figure 5. Relative contents of aromatic components in the juice yeast, pomance yeast, mixture yeast, and products wine

The figure shows that ester material loss is the most serious, total loss being 40.6%; Followed by alcohols, the total loss is 22.1%. Alkene material increased the most, total increase being 57.6%. Naphthalene class material is increased by 3.1% and ketone substance is increased by 1.7%.

The variation of aromatic components of mixture yeast in the distillation process is shown in Figure 5 (C1 and C2). The relative percentage content is increased by 15.9% of alkene on mixed yeast distillation process. The ester material relative percentage is decreased by 11.4% with being the largest quantity. The alcohols relative percentage is decreased by 6.3% and the rest of aromatic is only a smaller percentage change.

The Comparison of Aromatic Components in Different Olive Brandy

The aromatic component content is different in brandy products because of the differences of distillation raw materials in the olive brandy distillation process. The comparison of main aromatic components in three kinds of brandy is shown in Fig. 6.

Fig. 6 indicates that the content of aromatic components in different brandy has significant differences, which is similar to the aromatic components of pomance and mixture yeast, but different with juice yeast. Ester material is one of the important indexes for evaluating the quality of brandy. The quality of brandy is better if the ester material a higher generally. The content of ester material is the highest in the juice brandy, which is the reason for using the pomance and juice to separate pure juice for fermenting high-grade brandy.

Conclusion

The following conclusions can be drawn from this analysis. The optimum distillation temperature for olive brandy is 150 ℃, at which temperature the liquor yield reaches the highest. The kind of aromatic components is the highest the olive juice and pomance mixed liquor to fermented, up to 69 species. There are 66 kinds of aromatic components made from pomance yeast, while there are 46 kinds made from juice yeast with the species being the minimum. The percentage of ester substances is as high as 68.02 % in olive juice fermentation liquid. Ester substances content is 9.5% in pomance fermentation liquid and 15.8% in mixture fermentation liquid. Because the ester content is one of the important indicators of brandy evaluation, olive brandy fermented liquid suitable for making high quality olive brandy.

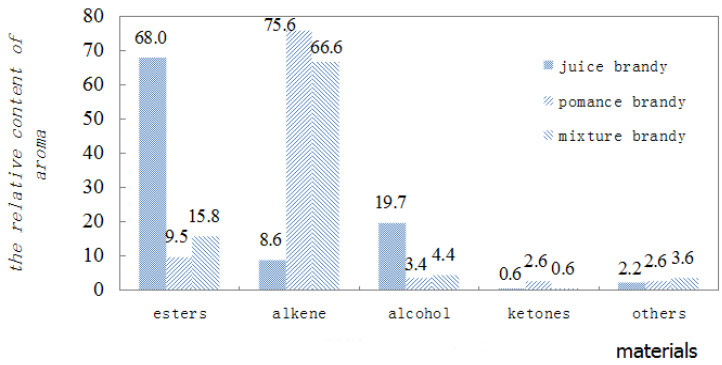

Figure 6. Comparison of aroma in different brandy

Acknowledgement

The Project Was Supported by the Foundation (No. 15JCTPJC60200) of Tianjin Science and Technology Correspondent and by Sichuan Provincial Key Lab of Process Equipment and Control (No. GK201303).

References

[1] Cai Dingyu., Wine industry analysis manual , Beijing,1988.

[2] Zheng Xiangping, Zhang Baochun Sun Zuli, Brandy volatile aroma compounds of preliminary explore, China brewing. China, 31 (9) 1-5.

[3] Yu Xiaoqin, Kan Jianquan, Olive wine, development and quality analysis, China brewing. China, 2005 (8) : 58-60.

[4] Lv Wen, Gao Quanfa, Wang Shusheng, In different regions of brandy base liquor distillation process analysis, Journal of volatile components in brewing technology, 2006 (11) : 101-103.

[5] Zhang Tianyi, Zeng Xinan, Chen Hongyun, Gong orange wine distillation senior alcohol content change research, Journal of brewing technology, 2012 (10)52-54, 58.

[6] Cui Yan, Lv Wen, Qian Weibin, Brandy distillation process of three kinds of high alcohol content variation analysis, Journal of brewing technology, 2008 (10) 103-106.

[7] Cao Jinjun, Li Jiming, Jiang Zhongjun, Changes of aroma constituents in brandy distillation process, Chinese and foreign grape and wine, 2009 (5) 60-63.

[8] Wang Lei, Zhang Baochun Shen Chunhua, Brandy distilled main volatile components change law study, Journal of agricultural products processing, 2010 (2) 23-25, 29.

[9] Qiao Junhua Zhao Yuping, Li Naiwei, Diana, Brandy secondary changes the content of main volatile components in the distillation process, Journal of agricultural products processing, 2010 (1) 60-63.

[10] Liu Qisong: Changyu brandy distillation aroma substances change law research,

Yantai, eastern shandong university, China, 2011.

[11] Fan, W. Qian, M. C., Characterization of Aroma Compounds of Chinese "Wuliangye" and "Jiannanchun" Liquors by Aroma Extract Dilution Analysis, Journal of agricultural and food chemistry, China, 2006 (54) 2695-2704.