The System of Cutting and Stacking of Casting Sprue Clay Pipe Based on PLC

Chaojun Wang[1, a], Jun Yao[2, b], Ran Tao[2, c], Bing Li[1, d], Yulan Wei[1, e,*]
[1]School of Engineering, HuZhou University, HuZhou, 313000, China
[2]China National Electric Apparatus Research Institute, GuangZhou, 510000, China
[a]email: 18768377703@sina.cn, [b]email: yaoj@cei1958.com, [c]email: taor22@163.com
, [d]email: bingli@hutc.zj.cn, [e]email: weiyl@hutc.zj.cn

Keywords: Casting sprue clay pipe; System of cutting and stacking; PLC control system

Abstract. Aiming at the issues that the big intensity of labor, large number of workers, low product efficiency and the quality refractory in the fire-proof material production enterprise in casting sprue clay pipe production pipe molding process in subsequent processing. A system of cutting and stacking of casting sprue clay pipe with PLC control system is designed, using it to improve the current machining process. The result shows that this system can raise the degree of automation of production process, reduce the labor force and improve the production efficiency under the premise of guaranteeing the quality of products. And it can be suitable for a set of different specifications of casting sprue clay pipe.

Introduction

Casting is the base of the equipment manufacturing industry, also the basic industry of national economy. Casting are widely needed in cars, machine tools, aviation, aerospace, national defense and people’s daily life, such as building hardware and household appliances. During the period of "The 11th five-year plan", the sale of machinery industrial production exceeded 10 trillion with the rapid development of national economy. And Chinese foundry industry also gets rapid development. By 2010, the countrywide casting production shall have been 3960 million tons and the employees about 2 million [1].

The spiral Vacuum Press had a long history of 100 years from it first appeared to widely applied to electric porcelain, china, bricks, sewers, refractory and many other industries. In recent years, the effects of the Vacuum Press in industry get increasingly significant with the development of the whole industry [2]. Due to the development of the Vacuum Press, its industry of casting sprue clay pipe is springing up gradually. As an emerging industry, its products have a smooth flow, resistant to molten iron and molten steel erosion, no absorption of liquid steel, can be cut, and other characteristic. It can simplify the molding process, eliminate the need for hard work on the inside of the gate paint, improve arranged gating system and avoid the flaw of sand casting, trachoma and sand defects. It has significant contribution in improving the quality of castings and casting yield, directly replaced the traditional steel brick and widely used in the production of cast iron and cast steel. The industry of casting sprue clay pipe gradually rises, but the subsequent processing of it was relatively backward, it still uses the traditional processing methods that fixed length cutting and stacking by handwork. The production process needs to stack twice and costs both time and manpower, not only labor costs are extremely high, but also with a low production efficiency, and the quality is hard to guarantee. All above seriously hindered the development of the casting gate clay pipe industry. As is shown in figure 1.

The subsequent processing of casting sprue clay pipe concludes: (1) Cutting the clay pipe by fixed-length; (2) Stacking the clay pipe. Many scholars have done a lot of researches on material cutting and stacking aspects. For example, Xu Huang [3] composited stainless steel tube cutting methods at home and abroad, analyzed and compared them, ultimately proposed the double symmetric planetary motion cutting, making the plastic deformation force in the process of cutting symmetry phase offset, reducing the deformation of cross section, thereby improving the flatness of the cross section; Through the finite element analysis software, Handong Huang [4] and others

reached some conclusions. First, the changes of cutting speed have a significant impact on cutting force, energy consumption and the maximum stress of the cutting tool in cutting process. And when its cutting speed is 0.5~ 0.9 m/s, its cutting force, energy consumption and the maximum stress of the cutting tool increase with the increase of cutting speed; Second, the changes of dip angle speed have a significant impact on cutting force. And when its dip angle is 0°, its cutting force is minimum; Qing Zuo [5] and others introduced the structure characteristic, working principle and configuration of bridge palletizer, robot palletizer and high level palletizer in detail. However, most scholars did not conduct in-depth study of cutting and stacking of clay pipe, only a few scholars have studied some related problems. For example, Guangzhou Zhu [6] researched and developed an automatic cutter for the Vacuum Press. Cylinder is used to clamp the clay pipe in order to realize the synchronous movement. And steel wire is used to cut off the clay pipe. To sum up, the subsequent processing of casting sprue clay pipe is still incomplete. Therefore, in order to further reduce labor costs, improve production efficiency and product quality, in-depth research and development of the system of cutting and stacking of casting sprue clay pipe is very significant.

Fig. 1 procedure of manual process

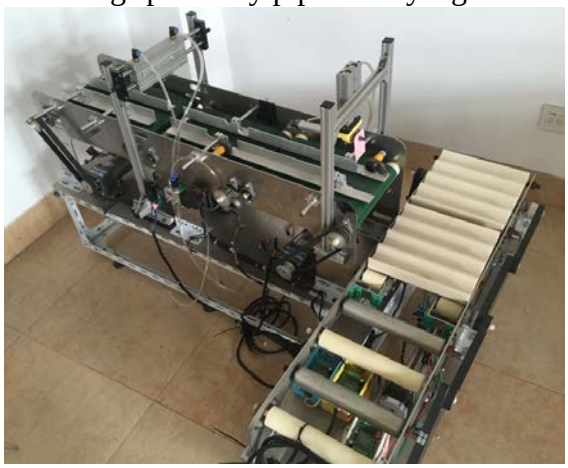

Fig. 2 picture of actual product

The design of system of cutting and stacking

The system of cutting and stacking of casting sprue clay pipe mainly includes conveying unit, cutting unit, taper unit and stacking unit, as is shown in figure 2 and figure 3. Conveying unit is used to transport clay pipes, which comprises a frame with guardrails, the first conveyor belt, the second conveyor belt, the third conveyor belt and the first sensor; Cutting unit is used to cut off clay pipe, it includes servo screw slide (driven by stepper motor) and slide cylinder; Taper unit is used to push the clay pipe, make the clay pipe fully into the stacking unit, which includes vertical screw slide, horizontal screw slide and the second sensor; Stacking unit is used to stack clay pipe, it includes material platform transmission mechanism, the third sensor and vertical and horizontal screw slide (driven by stepper motor).

The operation process of this system is as follows:

Adjusting the guardrails to the appropriate location, making the clay pipe that will be processed can axially move between the two guardrails, and then starting the Vacuum Press. When the clay pipe is extruded by the Vacuum Press, it will directly go into the first conveyor belt of the conveying unit, and drive it to move forward by the first conveyor belt; Then the clay pipe enters the second conveyor belt with the axial movement of it, the second conveyor belt has the same speed as the first conveyor belt, which makes the clay pipe still have enough power to move forward after the cutting; When the clay pipe moves to the location of the first sensor, the first sensor receives the signal, controls the sliding cylinder to move fast in the cutting unit with PLC, thus drives the cutting tool moving fast. All of them are done for cutting the clay pipe by fixed-length. The existence of the guardrails can reduce the radial channeling due to the cutting, and at the same time of cutting off the clay pipe, the servo screw slide which below the cutting unit can drive the whole cutting unit to do synchronous movement with the clay pipe. And the linear guides

which on both sides do as a guiding role.

The clay pipe that is cut continues moving forward under the impetus of the rear clay pipe, since the speed of the third conveyor belt is greater than the first conveyor belt, when the clay pipe is goes into the third conveyor belt, it will move quickly with the third conveyor belt, and forms certain spacing with the rear clay pipe.

The clay pipe moves to the stacking platform by the drive of the third conveyor belt. Due to the fact that the large resistance, the clay pipe cannot move into the stacking platform completely with the speed obtained by the foregoing procedure, then the taper mechanism will push the clay pipe into the stacking platform.

After the second sensor detected that all clay pipes completely transported to the stacking platform of the stacking unit, the second sensor gives a signal, and controls the stepper motor to drive the screw's rotation at a constant speed of the horizontal and vertical screw slide through the PLC, thereby making the stacking platform move in the Z, Y axis in fixed frequency and fixed speed. Firstly, controlling the stacking platform to move along the Y axis direction with the a specified distance, and guarantee the second section of clay pipe fully delivered to the stacking platform and located on one side of the first clay pipe. Repeat the above steps to complete the first layer stacking.

Secondly when stacking second layers, controlling the stacking platform to move along the Y, Z axis direction with the specified distance, making the rear clay pipe be located between the two stacking sections of the first layer. Repeat the above steps to achieve its automatic stacking in trapezoid.

Finally when stacking is completed, the stacking platform falls in the driving of the vertical screw slide. Then the rear stacking platform moves forward with the conveying equipment of material platform. The third sensor can detect whether the rear stacking platform has been transported to the top of two screw slide mechanism. If so, the vertical screw slide starts to lift the stacking platform to the specified height and achieve the automatic stacking in trapezoid again.

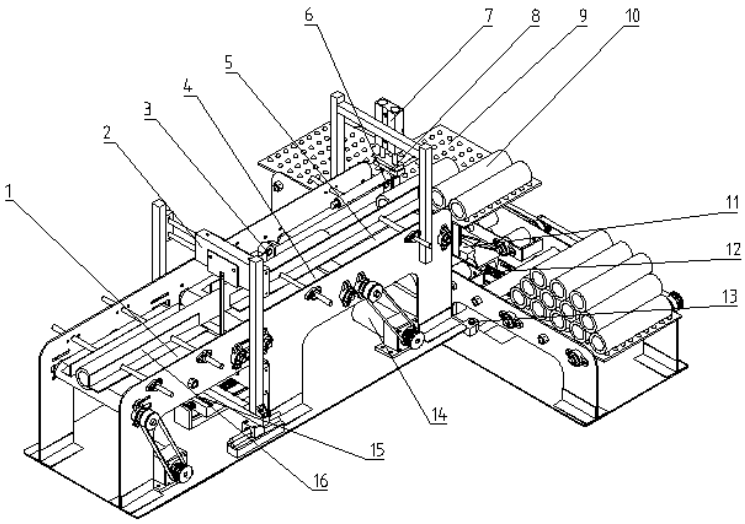

1. The first conveyor belt 2. Slide cylinder 3. The first sensor 4. The second conveyor belt 5. The third conveyor belt 6. The second sensor 7. Vertical and impellent cylinder 8. Horizontal and impellent cylinder 9. Stacking platform 10. Clay pipe 11. Vertical screw slide 12. Horizontal screw slide 13. The third sensor 14. Gear motor 15. Servo screw slide 16. Guardrails

Fig. 3 picture of system structure

The selection of important components

Based on the basic size of this system, the size of clay pipe and the needs of design, getting the main parameters as is shown in table 1.

The sliding cylinder is the most important element in this system which speed has a direct and significant impact on the shape of the cutting surface of the clay pipe. So the choice of the slide cylinder is vital. Look up to the literature [7], the output power and the relationship between the air pressure, as is shown in table 2.

The pressure of pump is inferior to 0.8 MPa, considering the sliding cylinder ejection force needs to launch 6 kg, selecting the diameter of cylinder is 20 mm. Considering the range it needs is 100 mm at least, selecting the model of cylinder is STMB20×100, the results of choice are shown in table 3.

According to table 1 and described above, the selection of the important components is shown in table 4.

TABLE 1 main parameters

The speed of The first conveyor belt （mm/s）	The speed of The third conveyor belt （mm/s）	The speed of transmission mechanism （mm/s）	The speed of screw machine （mm/s）	The largest range of Slide cylinder （mm）
40	100	100	40	100

TABLE 2 the relationship between the output force and air pressure

The diameter of cylinder (mm)	The theoretical output force of the cylinder (thrust) units：KG Air pressure MPa						
16	4.02	6.03	8.04	10.1	12.1	14.1	16.1
20	6.28	9.42	12.6	15.7	18.8	22.0	25.0
25	9.81	14.7	19.6	24.5	29.4	34.4	39.2

TABLE 3 the performance parameters of the slide cylinder

The model of Cylinder	The diameter of cylinder（mm）	The range of pressure(MPa)	The resistance of pressure(MPa)	The range of speed(mm/s)
STMB20×100	20	0.1-1	1.5	30-500

TABLE 4 important components list

Name	Number	Model
Sensor	3	E18-D80NK
Electromagnetic relay	3	JQC-3F
Solenoid valve	3	4V210-08
Slide cylinder	2	STMB-20×100
Biaxial cylinder	1	TN20×50
Single axis cylinder	1	MAL16×75
Stepper motor	3	57BYGH56
Gear motor	3	ZYT-60S-36

The design of PLC control system

Programmable controller PLC is specially designed for industrial control. Manufacturers take multi-level anti-jamming measures in the design and manufacturing process, so that the system can work in harsh industrial environments with heavy current installation. A high stability and reliability of the system is running, the average trouble-free working hours of PLC is up to tens of thousands of hours. With the development of computer technology, the function of PLC is becoming stronger, and is used more conveniently [8]. It not only has been used in traditional manufacturing, but also in other fields [9].

Mitsubishi PLC has a lot of characteristics, such as the flexible structure; high quality of transport, fast speed, stable bandwidth; low cost; wide scope of application [10]. So the Mitsubishi PLC that model is FX2N-64MT is used as the PLC control system (Which is suitable for pulse output Y0, Y1). Due to the fact that the output signal of sensor is current signal, each sensor needs to form a set of electromagnetic relay, then connect to the PLC; Four cylinders all need to form a set of solenoid valve, but two slider cylinder motion should be synchronized, therefore using the same solenoid valve.

The principle of PLC control system is as follows:

Connecting the first sensor with the PLC input port X0, to receive the displacement signal of the clay pipe;

Connecting the stepper motor of screw machine and the slide cylinder with the PLC output port Y0, Y10 (Which is suitable for pulse output Y0). Using the signal that is received by the first sensor to control the movement of these organizations, to make the cutting unit completes the follow-up cutting;

Connecting two travel switches with the PLC inputs X11, X12, to detect the location of the slide cylinder, to make the program become simpler;

Connecting two travel switches with the PLC inputs X2, X3, to limit the displacement limit of sliding table of the screw machine, thus limiting the dynamic displacement limit of the cutting unit;

Connecting the second sensor with the PLC input port X1, to receive the displacement signal of the clay pipe;

Connecting the vertical and impellent cylinder, the horizontal and impellent cylinder, the vertical screw slide and the horizontal screw slide with the PLC output port Y11, Y12, Y4, Y5 (Which is suitable for pulse output Y1. Connecting the Y1 with com2 to make the Y4, Y5 into pulse output). Using the signal that is received by the second sensor to control the movement of these organizations, to complete the movement of stacking platform in the vertical and horizontal direction;

Connecting four travel switches with the PLC input X7, X10, X5, X6. Using four travel switches to limit the displacement limit of the vertical screw slide and the horizontal screw slide;

Connecting the third sensor with the PLC input port X4, to receive the displacement signal of the stacking platform;

Connecting the gear motor of the conveying equipment of material platform with the PLC output port Y17. Using the signal that is received by the third sensor, to control the movement of these organizations, transporting the stacking platform to the specified location.

The working principle of the control is shown in figure 4.

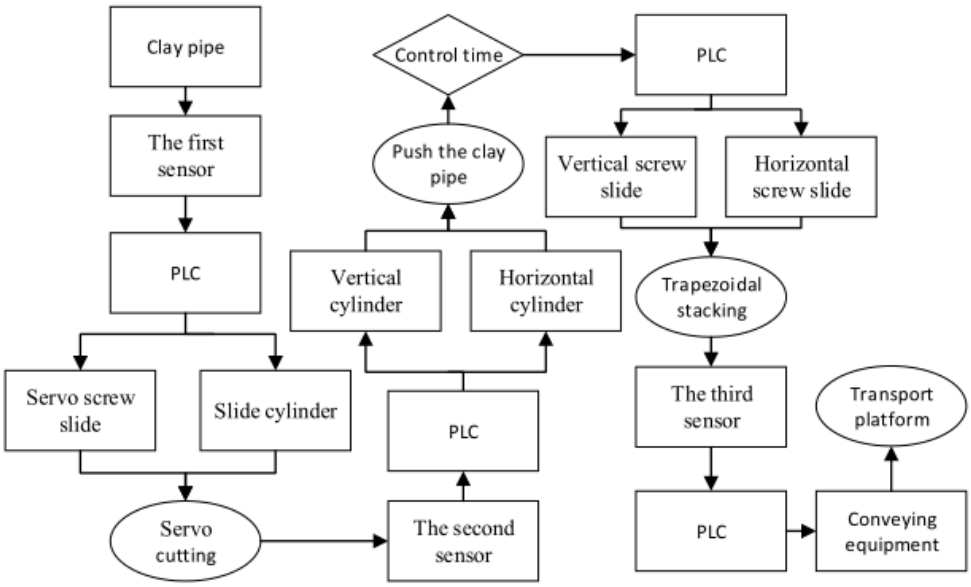

Fig. 4 flow chart of control

Conclusion

The cutting and stacking system of casting sprue clay pipe completes the task that cuts, conveys and stacks the different specifications of clay pipe through conveying unit, cutting unit, taper unit and stacking unit which is controlled by Mitsubishi PLC. It effectively solves the issues that the large labor intensity, labor quantity, low production efficiency, quality control and so on in the subsequent processing of casting sprue clay pipe, and it achieves a higher level of automation; At the same time, it can reduce the economic losses of casting defects that is caused by quality problems of casting sprue clay pipe in our country.

Acknowledgement

This project is supported by College Students' Science and Technology Innovation Activities Scheme and Emerging Artists Talents of Zhejiang (2015R427014), and Zhejiang Provincial Natural Science Foundation of China (LQ12E05008).

* Corresponding Author, weiyl@hutc.zj.cn.

References

[1] Jianguo Liu Tianyou Huang Dingquan Lu Zhiqiang Xia. Analysis on Development of Chinese Foundry Industry in 12th Five-Year Plan Period[J]. Founder Technology, 2012, 33(9).

[2] Yikun Zheng. Foreign Vacuum Press profiles [J]. Insulators and Surge Arresters, 1979, (5).

[3] Xu Huang. Cutting methods and the equipment research of thin-walled stainless steel tube [D]. HuBei: Hubei University of Technology, 2014.

[4] Handing Huang Yuxing Wang Yanqin Tang Feng Zhao Xiangfa Kong. Finite element simulation of sugarcane cutting[J] . Transactions of the CSAE, 2011, (2).

[5] Qing Zuo Guisheng Wang. Application of full-automatic palletizer[J]. China Oils and Fats, 2010, (2).

[6] Guangzhou Zhu. Automatic cutter for Vacuum Press[P]. Chinese Patent: 201320285794.1, 2013-05-23.

[7] Jiwei Wang Hongjia Zhang Yi Huang. Hydraulic and pneumatic transmission[M]. BeiJing: China Machine Press, 2007.8.

[8] Zhongmin Zhao Qiuyun Zhang Guangcai Yang. The design of PLC control system[J]. Machine Tool Electric Apparatus, 2007, (2).

[9] Jian Liu. The Design and Implementation of Control System of Wire-GrindingMachine and Wire-Stripping Machine Based on PLC[D]. GuangXi: Guangxi Normal university, 2008: 9.

[10] Baizhong Wang. Introduction to application of mitsubishi PLC in the automatic control equipment[J]. Kji Zhifu Xiandao, 2011, (6).