Isobaric Vapor-Liquid Equilibrium of Binary Systems {Hexamethyl Disiloxane + Butyl Acetate} and {Hexamethyl Disiloxane + Isobutyl Acetate} at 101.3kPa

W.L. ZHANG & Y. Yue & X.W. Wang & G.Y. Zhu & C.L. Li
Hebei University of Technology, Tianjin, China

Y.C. Shao
Tianjin Plate Technology & Development Co. Ltd., Tianjin, China

ABSTRACT: Vapor-liquid equilibrium (VLE) data of hexamethyl disiloxane (HMDSO, 1) + butyl acetate (BAC, 2), HMDSO + isobutyl acetate (IBAC, 3) systems were measured by using the double circulating VLE still at 101.3kPa. The thermodynamic consistencies of the VLE data were examined by the Herrington method. Experimental data were correlated by the Wilson, nonrandom two-liquid (NRTL), and universal quasichemical activity coefficient (UNIQUAC) parameter models. All of the models were satisfactorily correlated with the VLE data. The result showed that the UNIQUAC model was the most suitable one to represent experimental data for HMDSO + BAC system, and the NRTL model was the most suitable one for HMDSO + IBAC system. The two systems had no azeotropic phenomenon.
KEYWORD: VLE; hexamethyl disiloxane; UNIQUAC; Wilson; NRTL

1 INSTRUCTION

Isobaric Vapor-liquid equilibrium (VLE) data are important to understand the behaviour of chemical substances and mixtures at different conditions, for separation operations such as distillation and adsorption to include the efficient use of energy.

Nowadays along with the rapid development of pharmaceutical intermediates industry, distillation can be used in separating of hexamethyl disiloxane + ester mixture. Vapor–liquid equilibrium data always need to be added gradually so as to meet the needs of distillation. Up to now, there is few VLE data for those systems. In this work, isobaric VLE data for the HMDSO (1) + BAC (2) system and the HMDSO (1) + IBAC (3) system were investigated at 101.3 kPa. The results of the binary system were tested for thermodynamic consistency by Herrington method[1,2]. Meanwhile, The Wilson[3], NRTL[4] and UNIQUAC[5] equations were applied to fit with experimental data.

2 EXPERIMENTAL

2.1 *Chemicals*

Hexamethyl disiloxane (AR), supplied by Shanghai Nuotai Chemical Factory in China, was further purified by distilling. Butyl Acetate (AR) was supplied by Tianjin Guangfu Fine Chemical Research Institute. Isobutyl Acetate (AR) was supplied by Tianjin Reagent Factory.

All the chemicals had been analyzed by gas chromatography (GC) and no detectable impurity was observed. The properties of the experimental materials were shown in Table 1.

Table 1. Physical properties of the pure components.

Property	HMDSO(1)	BAC(2)	IBAC(3)
Formula	$C_6H_{18}Si_2O$	$C_6H_{12}O_2$	$C_6H_{12}O_2$
MW [g.mol^{-1}]	162.38	116.16	116.16
T_b [K]	373.67	350.21	389.80
T_c [K]	518.70	523.30	560.80
P_c [MPa]	1.914	3.879	3.010

2.2 *Apparatus and Procedure*

The double circulating still of modified Othmer type[6] was used to measure VLE data. The diagram for the still was showed in Fig. 1. It took approximately 2 h to reach the stabilization of the system in study.

About 45mL of the mixture of known composition obtained by weight using a balance with a resolution of 10^{-4}g was put into the still. The equilibrium temperature was measure by a digital thermometer with an error of less than 0.3K.

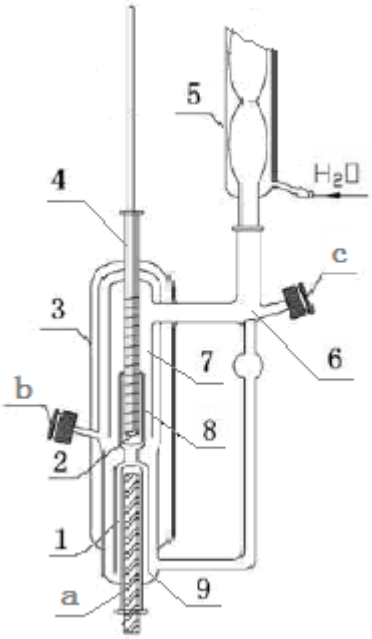

1—boiling room; 2—liquid-phase sample reservoir; 3—vacuum thermal insulating jacket; 4—thermometer casing ; 5—vapor-phase condenser ; 6—vapor-sample reservoir; 7—vapor-phase separator room; 8—vapor-liquid riser; 9—vapor-liquid mixed room; a—inner heater tube; b—liquid-phase sample port; c—vapor-phase sample port

Figure 1. Double circulating still.

2.3 *Sample analysis*

To determine the liquid and vapor samples, gas chromatography (GC3420A, Bei Fen Co.) was used with a 30m long capillary column (HJ-OV-1701, 0.32mm in diameter and 0.5μm film thickness) and a hydrogen flame ionization detector (FID). The column, injector, detector temperatures were 393.15K, 453.15K and 453.15K, respectively. The carrier gas was nitrogen at a constant flow rate of 30mL/min. Hydrogen and compressed air were used at a constant flow rate of 30 and 300mL/min, respectively. The injected sample was 0.4μL. Each sample was analyzed at least thrice to ensure accuracy with an error within ±0.005. Then, the data was calibrated by series of standard mixtures which were prepared increase 5 percent gravimetrically.

3 RESULTS AND DISCUSSION

3.1 *Experimental data*

The VLE data for the binary systems was showed in Table 2 and Table 3.

Table 2. VLE data of the HMDSO (1) + BAC (2) system at 101. kPa..

T (K)	y_1	y_2	x_1	x_2
398.32	0.0003	0.9997	0.0003	0.9997
398.20	0.0455	0.9545	0.0131	0.9869
396.77	0.0826	0.9174	0.0272	0.9728
394.77	0.1834	0.8166	0.0557	0.9443
393.16	0.2063	0.7937	0.0916	0.9084
391.11	0.2823	0.7177	0.1113	0.8887
389.54	0.3490	0.6510	0.1573	0.8427
388.21	0.4454	0.5546	0.2243	0.7757
386.64	0.4625	0.5375	0.2744	0.7256
385.57	0.5328	0.4672	0.3207	0.6793
384.23	0.5503	0.4497	0.3502	0.6498
382.93	0.6274	0.3726	0.3789	0.6211
382.10	0.6584	0.3416	0.4375	0.5625
380.87	0.6925	0.3075	0.4951	0.5049
379.75	0.7210	0.2790	0.5378	0.4622
378.83	0.7622	0.2378	0.5878	0.4122
377.80	0.8111	0.1889	0.6784	0.3216
376.77	0.8469	0.1531	0.7570	0.2430
376.00	0.8681	0.1319	0.7905	0.2095
375.01	0.9072	0.0928	0.8621	0.1379
374.23	0.9537	0.0463	0.9302	0.0698
374.20	0.9750	0.0250	0.9651	0.0349
373.60	0.9975	0.0025	0.9975	0.0025

Table 3. VLE data of the HMDSO (1) + IBAC (3) system at 101.3 kPa.

T (K)	y_1	y_3	x_1	x_3
389.56	0.0328	0.9672	0.0105	0.9895
388.89	0.0617	0.9383	0.0269	0.9731
387.53	0.1579	0.8421	0.0528	0.9472
386.16	0.1982	0.8018	0.0960	0.9040
384.83	0.2542	0.7458	0.1328	0.8672
383.64	0.3542	0.6458	0.1790	0.8210
382.57	0.3968	0.6032	0.2352	0.7648
381.55	0.4327	0.5673	0.2892	0.7108
380.64	0.4776	0.5224	0.3243	0.6757
379.83	0.5091	0.4909	0.3608	0.6392
379.17	0.5245	0.4755	0.3927	0.6073
378.36	0.5596	0.4404	0.4492	0.5508
377.57	0.6241	0.3759	0.4955	0.5045
376.96	0.6569	0.3431	0.5605	0.4395
376.37	0.7041	0.2959	0.6163	0.3837
375.86	0.7344	0.2656	0.6716	0.3284
375.35	0.7846	0.2154	0.7235	0.2765
374.95	0.8229	0.1771	0.7816	0.2184
374.55	0.8837	0.1163	0.8569	0.1431
374.23	0.9435	0.0565	0.9338	0.0662
374.07	0.9782	0.0218	0.9723	0.0277

3.2 *Thermodynamic consistency test*

Since the equilibrium pressures were sufficiently low in the investigated system, the vapor phase could be considered as the ideal gas. The activity coefficients equation was simplified to

$$\gamma_i = Py_i / x_i P_i^s \quad (1)$$

The vapor pressure of pure component was calculated by Antoine equation as follows:

$$\ln p_i^s = a + b/T + c\ln T + dT^e \quad f \le g \quad (2)$$

Where a,b,c,d,e were component specific coefficients, f and g were scopes of application temperatures.

Table 4. Antoine equation parameters.

	HMDSO(1)	BAC(2)	IBAC(3)
Temperature units	K	K	K
Pressure units	MPa	MPa	MPa
a	37.1135	109.0045	58.4945
b	-5597	-9253.2	-6944.3
c	-4.1262	-14.99	-7.298
d	$6.381E^{-18}$	$1.047E^{-5}$	$3.789E^{-6}$
e	6	2	2
f	204.93	199.65	174.3
g	518.7	575.4	560.8

The thermodynamic consistency of VLE data for the system was tested by Herrington method. The data of the HMDSO, (1) + BAC, (2) system was plotted in Fig.2. By calculating, D was 19.66, J was 10.93, and the check result D-J was 8.69 which was less than 10. Therefore, the VLE data passed the Herington test. The data of the HMDSO, (1) + IBAC, (3) system was plotted in Fig.3. By calculating, D was 7.67, J was 6.47, and the check result D-J was 1.20 which was less than 10. Therefore, the VLE data passed the Herington test.

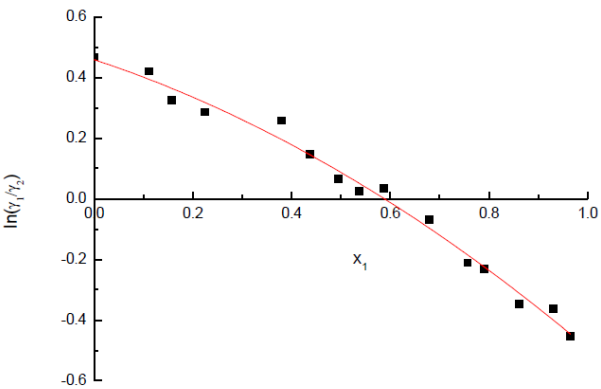

Figure 2. Herrington test of HMDSO (1) + BAC (2).

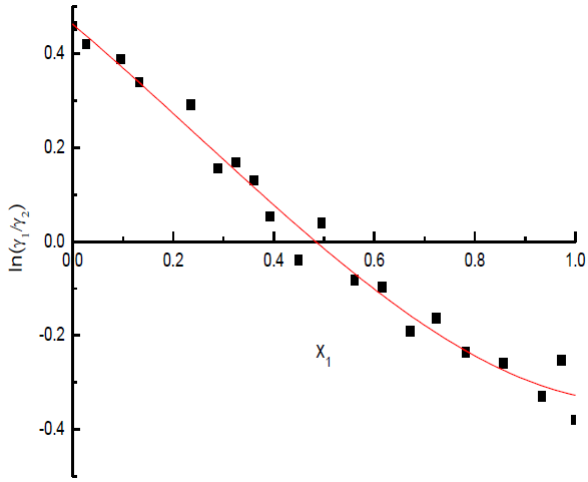

Figure 3. Herrington test of HMDSO (1) + IBAC (3).

3.3 *Correlation of the system*

The Wilson, NTRL and UNIQUAC models were used to correlate the experimental VLE data. According to the least square method, each equation parameters could be received. The resulting model parameters were shown in Table 5 and Table 6.

Table 5. Binary interaction parameters of the HMDSO (1) + BAC (2) system.

	Wilson	NRTL	UNIQUAC
	$\ln A_{ij}=B_{ij}/T$	$\tau_{ij}=B_{ij}/T$	$\tau_{ij}=\exp(B_{ij}/T)$
B_{15}	132.6948	515.8629	-315.9318
B_{51}	-401.8302	-233.2588	196.6320
$\triangle T_{AD}$	0.2125	0.200	0.199
$\triangle T_{MD}$	1.939	1.966	1.970
σ_T	0.6970	0.7078	0.7082
$\triangle y_{AD}$	$-4.18E^{-3}$	$3.857E^{-3}$	$-2.72E^{-3}$
$\triangle y_{MD}$	$-4.60E^{-2}$	$-4.66E^{-2}$	$-4.63E^{-2}$
σ_y	0.01661	0.01684	0.01694

Table 6. Binary interaction parameters of the HMDSO (1) + IBAC (3) system.

	NRTL	UNIQUAC	Wilson
	$\tau_{ij}=B_{ij}/T$	$\tau_{ij}=\exp(B_{ij}/T)$	$\ln A_{ij}=B_{ij}/T$
B_{16}	-213.8246	91.8684	-374.7735
B_{61}	473.4416	-144.8666	123.4952
$\triangle T_{AD}$	-0.2562	-0.2563	-0.2569
$\triangle T_{MD}$	-0.8368	-0.8313	-0.8314
σ_T	0.4749	0.4704	0.4687
$\triangle y_{AD}$	-8.83E-3	-8.99E-3	-8.99E-3
$\triangle y_{MD}$	-4.08E-2	-4.23E-2	-4.26E-2
σ_y	0.01551	0.01588	0.01594

Of the HMDSO (1) + BAC (2) system, according to Table 5 , three equations in the average deviation of the temperature was close to 0.2K, but the UNIQUAC average composition in the vapor phase

was the least. So the UNIQUAC equation was chosen to draw the T-x-y diagram[7]. The result was shown in Fig.4.

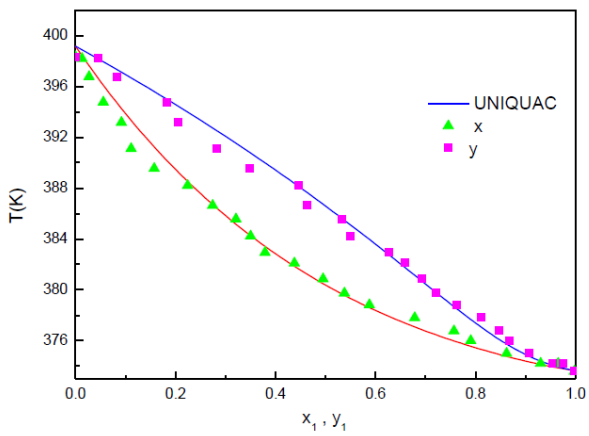

Figure 4. T-x-y diagram for the HMDSO (1) + BAC (2) system.

The Fig. 4 show that the system was not in good agreement with the formation of azeotropic system[8]. But the experimental data and fitting curves were in good agreement.

Of the the HMDSO (1) + IBAC (3) system, according to Table 6, compared with the other two equations the interaction parameters of NRTL equation in the vapor phase and the average temperature deviation was small. So the NRTL equation was chosen to draw the T-x-y diagram .The result was shown in Fig. 5.

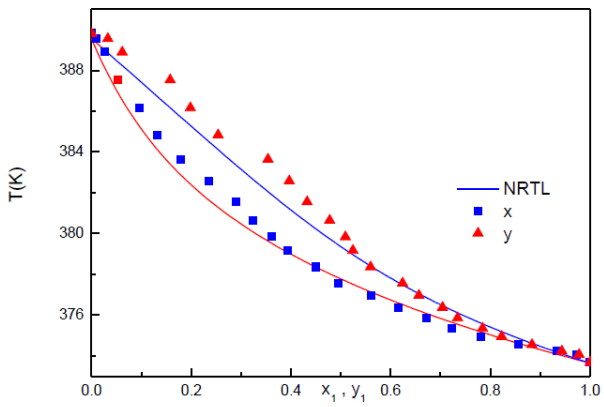

Figure 5. T-x-y diagram for the HMDSO (1) + BAC (3) system.

The Fig. 5 shows that the system did not have azeotropic phenomenon. In the low concentration range, the vapor-phase line had larger deviation with the experimental points.

4 CONCLUSION

Isobaric VLE data at 101.3kPa were measured for two binary mixtures, i.e. HMDSO (1) + BAC (2) and HMDSO (1) + IBAC (3). The Wilson, NTRL and UNIQUAC models were used to correlate the experimental VLE data. Deviation from ideal solution behavior was observed for both binary systems, whereas none of them showed azeotropic behavior. The UNIQUAC model fit better for the system of HMDSO (1) + BAC (2), while the NRTL model gave higher values for the system of HMDSO (1) + IBAC (3).

5 REFERENCES

[1] A. Blinowska, T.M. Herrington, L.A.K. 1973. Staveley,The prediction of the excess functions of liquid mixtures using a modified hard-sphere equation of tate. *Cryogenics*. 2(13), 85–93.

[2] Abobott M M, Van Ness HC. 1972. Theory and Problems of Thermodynamics. New York: McGraw-Hill.

[3] Wilson, G. M. Vapor-Liquid Equilibium. XI. 1964. A New Expression for the Excess Free Energy of Mixing. *J. Am. Chem. Soc* 86(6), 127-130.

[4] Renon, H. Prausnitz, J. M. 1968. Local compositions in thermo-dynamic excess function for liquid mixtures. *AIChE J.* 14,135-144.

[5] Abrams, D.; Prausnitz, J. M. 1975.Statistical thermodynamics of liquid mixtures: A new expression for Gibbs energe of partly or completely miscible System. *AIChE J*21, 116-128.

[6] Wen-Lin Zhang; Kai-Hu Hou; Guan-Jie Mi. 2007. Study on Isobaric VLE Data for the Binary System of Thiophene and Octane. *Journal of Chemical Engineering of Chinese Universities.* 21(06), 911-913.

[7] Chang-shen Ye, Cheng Lin, Xiu-lin Fang. 2009. Experimental measurements and correlations of vapor–liquid equilibrium data for the binary system of chloroform +N,N-dimethylformamide at 101.3 kPa.*Fluid Phase Equilibria* 278, 85–89.

[8] Bieker Thomas, Simmrock Karl Hans. 1994. Knowledge integrating system for the selection of solvents for extractive and azeotropic distillation. *Computers & Chemical Engineering.* 18, S1, S25–S29.