The Research on Software of SOA Evolution

Jun DING[1], Ye QIAN[2, a], Jihong SUN[3], Na LI[4], Guoquan LU[2]

[1]Yunnan Normal University, Kunming, 650500, China

[2]Yunnan Agricultural University, Kunming 650091, China

[3]Academy of Sciences in Yunnan Province, Kunming 650091, China

[4]Kunming Medical University Haiyuan College,Kunming,650106,China

[a]Corresponding author, email: qy198403@163.com

Keywords: Software of SOA Model; Dynamic Evolution; Workflow-net

Abstract. Service-oriented software system is facing a challenge to regulate itself promptly because of the evolving Internet environment and user requirements. In order to effectively control software of SOA dynamic evolution, by the formal tool Workflow-net, software of SOA model which is composed of four basic structure is put forward, on the basis of which, two types of software of SOA evolution is proposed.

Introduction

Under the influence of the globalized economy, the requirements and environment of computing system has been undergoing tremendous changes. Because the elements of the system change frequently, the software is facing a challenge to regulate itself promptly for the changing demands, SOA and web service has come into being under the circumstances. According to the first and second paper, SOA (service-oriented architecture) is now capturing more and more attention in the software industry and academia. SOA is used to completely solve the problem of information isolation, for application and resources will be transformed into standard services which can be shared in the Internet environment [1][2].

Nowadays, software systems change continuously with the changes in techniques and requirements [3]. We used to analyze evolution of traditional software system based on modeling software architecture. Because there are many different between traditional software and software based on SOA, the model of service-oriented architecture (SOA) is indispensable. In this paper, In order to effectively control software of SOA dynamic evolution, by the formal tool Workflow-net， software of SOA model which is composed of four basic structure is put forward, on the basis of which, two types of software of SOA evolution is proposed.

Related Work

A. SOA

So far there is no agreement on a universally accepted definition for service-oriented architecture (SOA), and this paper identifies with the definition of SOA by W3C.

Definition1: (SOA) In W3C, SOA is an application architecture in which all services with Well-defined callable interface defined as independent functional, and these services are called in a particular order to form a business process [4].

There are four important features of service-oriented software architecture following:

a) Multi-level architecture [5]. With the increasingly large-scale software systems, software systems become increasingly complex, and SOA, as a form of distributed systems architecture, is also increasingly complex. Therefore, systems architecture is usually stratified to reduce the complexity of it.

b) Loosely coupled [4]. SOA is loosely coupled system architecture, which makes quarantine service users and service providers from the service implementations and how to use services by

customers.

c) Different granularity service in scale. Granularity of service is the scope of a service public function, and services are divided into fine granularity services which can provide a small usability service in business processes and coarse granularity services which can provide usability service in high-level business logic [4]. Because of different granularity service in scale, SOA should be hierarchical with the same size granularity service in one layer, and it is easier to analyze the service evolution in each layer.

d) Interaction and cooperation [6]. All services in SOA interact and cooperate with each other to accomplish the mission of users, so each part of the software system is complementary to a whole, and not isolated.

There are other characteristics in SOA, the above features which this paper argues is most important for modeling SOA.

B. Petri Nets

Petri Nets are graphical formalisms which have gained popularity as tools for the representation of complex logical interactions (like synchronization, sequentially, concurrency and conflict) [3] among services in software based on SOA. In this paper，Workflow-net，a kind of Petri Nets is used as formal tool for formalizing software architecture based on SOA.

Definition2 [3][10]**:** A triple $N = (P, T, F)$ is called a net iff

(1) P, T are disjoint sets.

(2) $F \subseteq (P \times T) \cup (T \times P)$ is a binary relations.

Definition3 [3][10]**:** A triple $N = (P, T, F)$ is called a net

(1) For $x \in N$

$\cdot x = \{y | y\ F\ x\}$ is called the preset of x;

$\cdot x = \{y | x\ F\ y\}$ is called the postset of x.

(2) For $x \subseteq N$

$\cdot x = \bigcup_{x \in X} \cdot x$ and

$x \cdot = \bigcup_{x \in X} x \cdot$.

(3) A pair $(c, a \in P \times T)$ is called a self-loop iff $c\ F\ a \wedge a\ F\ c$. N is called pure iff F does not contain any self-loop.

(4) $x \in N$ is called isolated iff $\cdot x \cup x \cdot = \phi$.

(5) N is called simple iff $\forall x, y \in N: (\cdot x = \cdot y \wedge x \cdot = y \cdot) \Rightarrow x = y$.

Definition4 (Workflow-net) [8][9]**:** A Petri net $WFN = (P, T, F)$ is called workflow-net iff:

There is an initial place $i \in P$, $\cdot i = \phi$;

There is an end place $o \in P$, $o \cdot = \phi$;

Each node $x \in P \cup T$ are located in the a path from i to o.

In Workflow-net, atomic-service or sub-composite service is formalized as transition; the condition which can trigger transition is formalized as place; flow relationship regulates the logical structure of interaction relations among atomic-services or sub-composite services. The state of Workflow-net is defined as token distribution in all places, and | P |-dimensional vector M indicates the real-time state of a running instance in the Workflow-net, every element in M is the number of tokens in the corresponding place, for instance, M_P indicates the number of tokens in place p.

An Approach to Modeling Multi-level Software Architecture Based on SOA

According to the above characteristics in SOA，SOA is Multi-level architecture, by Workflow-net, a formal, multi-level software architecture model based on SOA is proposed, which is formalized，the hierarchical structure can be divided into three layers from the bottom to the up: Atomic services layer, sub-composite service layer and composite service layer.

Atomic service is the smallest granularity service, and it can't be split. In order to supply more function, many atomic services can constitute a sub-composite service. A lot of sub-composite services or atomic services can further constitute layer by layer until the modeler satisfaction, in this

way, composite service is obtained, and a formal, multi-level service is formed.

Definition5: (Formal Definition of Multi-level Service)

An atomic service is mapped to a transition,

A Sub-composite service is mapped to a sub workflow-net,

A composite service is mapped to a workflow-net.

There is four basic structure in the multi-level service model.

(Sequential structure) t and t' are two atomic services or sub-composite services, transition t and t' execute in sequence, which is shown in Figure1.

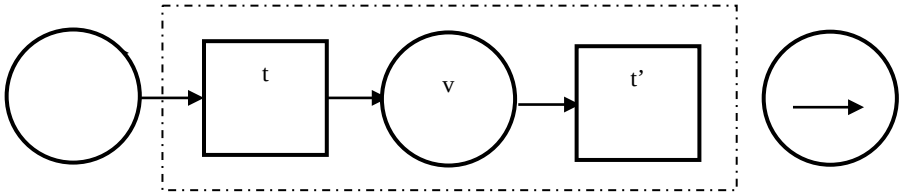

Fig.1. Sequential composition

(Concurrent structure) t_1, t_2, t, t' are atomic services or sub-composite services, transition t and t' can trigger at the same time. When transition t and t' can be triggered, which is shown in Figure2.

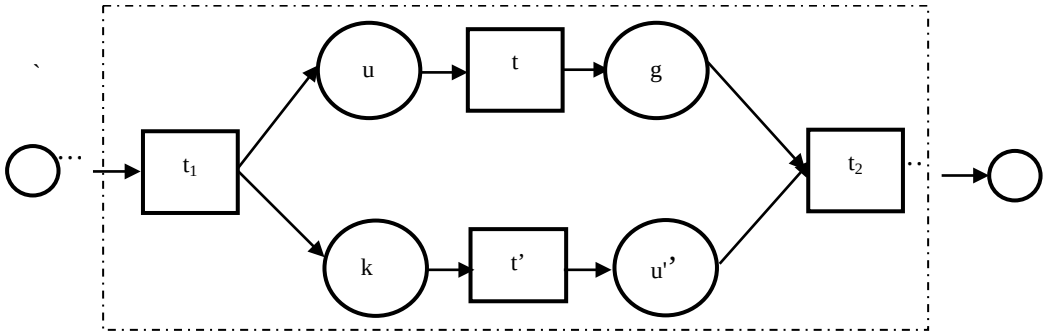

Fig.2. Concurrent composition

(Choice structure) t and t' are two atomic services or sub-composite services, transition t and t' are chosen to execute, which is shown in Figure3.

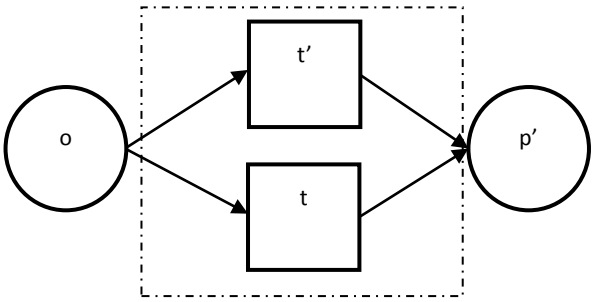

Fig.3. choice composition

(Iteration structure) t_1, t_2, t and t' are atomic services or sub-composite services, transition t and t' can be triggered repeatedly. After the occurrence of t, t' or t_2 can trigger. If t_2 is chosen to execute, iteration is terminated, which is shown in Figure3.

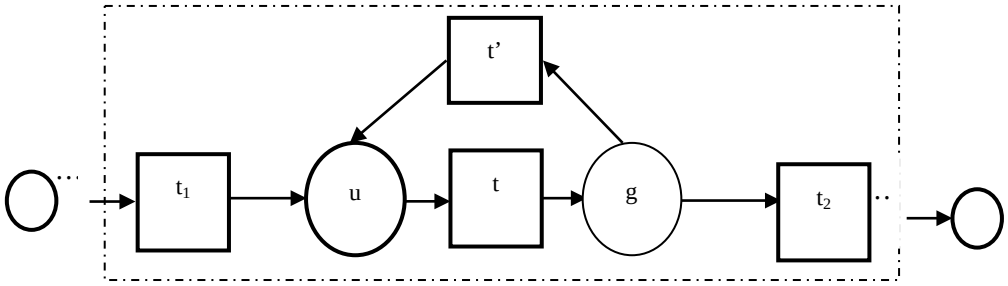

Fig.4. iteration composition

The seventh paper points out that sequential composition, concurrent composition, choice composition, and iteration composition do not introduce non-deterministic.

The Research on the Evolution of Software Based on Multi-level Architecture Model of SOA

Based on the only one import and export in service, there are two types Evolution of Software Based on Multi-level Architecture Model of SOA, service evolution and structure evolution.

Definition6（service evolution）: is the alteration of atomic services which constitute the service, the modality of it includes delete operation, add operation and replace operation.

Delete operation

In the service, if there is unnecessary atomic service，delete operation is utilized, which is shown in figure5.

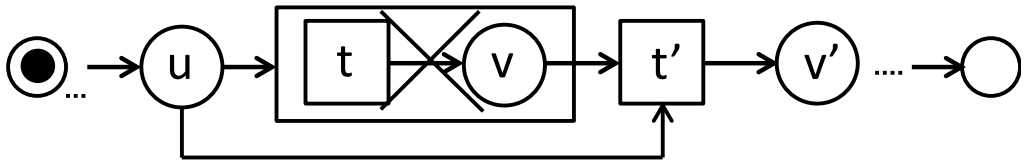

Fig.5. delete operation

Add operation

If there is an atomic service to be added to the service， add operation is utilized, which is shown in figure6.

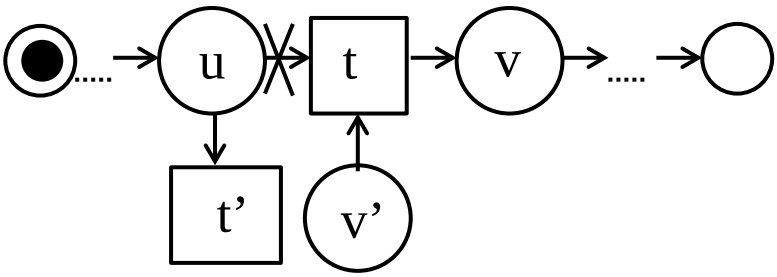

Fig.6. add operation

Replace operation

If there is an atomic service to be substituted for another atomic service in the service, replace operation is utilized, which is shown in figure7.

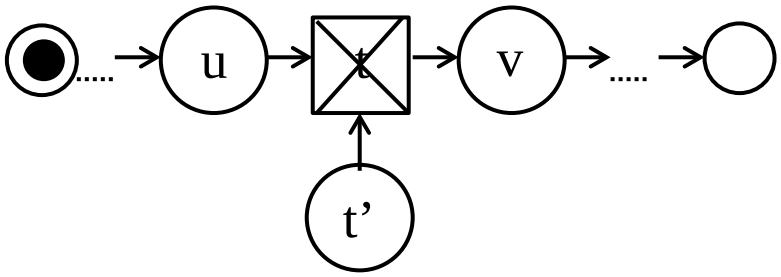

Fig.7. replace operation

Definition5 （structure evolution）: Structure evolution is the alteration of organization structure of atomic services which constitute the service, however, atomic services in the service is not changed.

There is an example of structure evolution in figure8.

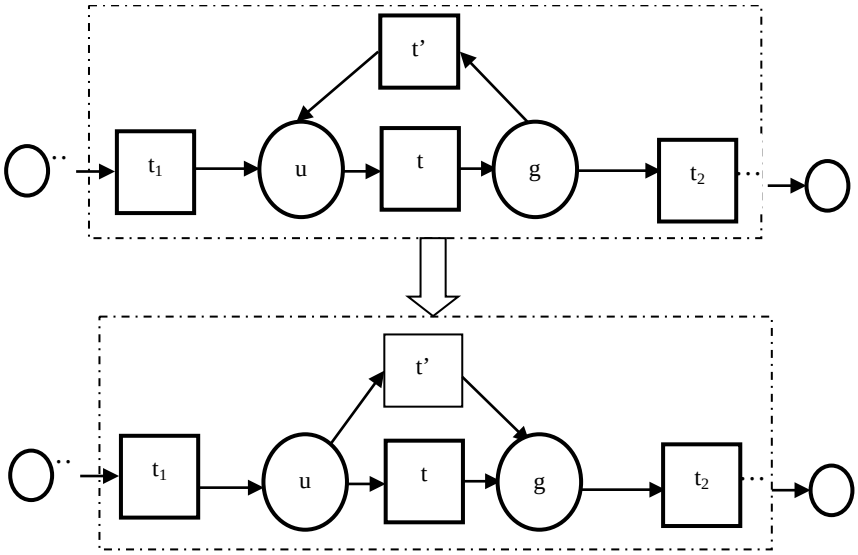

Fig.8. an example of structure evolution

Frequently, for the part which is need to be evoluted in the software there is a mixture of service evolution and structure evolution.

The Process of Software Evolution Based on SOA as follows:

Input: the original of software model based on SOA

Output: the model of software based on SOA which is evoluted

BEGIN

While(!M) // M is the set of parts which are need to be evoluted in the software based on SOA

BEGIN

For m∈M

If there is an atomic service to be deleted in m

Call delete operation;

If there is an atomic service to be added in m

Call add operation;

If there an atomic service to be substituted for

another atomic service in m

Call replace operation;

IF there is n to be modified // n is local structure in m

Call the process Modeling n;

END WHILE

END

Conclusion

In this paper, In order to effectively control software of SOA dynamic evolution, by the formal tool Workflow-net, software of SOA model which is composed of four basic structure is put forward, on the basis of which, two types of software of SOA evolution is proposed.

Acknowledgement

In this paper, the research was sponsored by the Applied Basic Research Programs of Yunnan Province (Project No. 2012FD020) and Science Foundation of Education Department of Yunnan Province (Project No. 2012C086).

References

[1] Xu Xiaofei WangZhongJiethe development and impact of the services Calculation and service project. 2008 China Computer Science and Technology Development Report.

[2]Han Ding, Shen jianjing, Research on encapsulation of service component based on service-oriented architechture.2009,30(7) Computer Engineering and Design.

[3]Tong Li. An approach to modeling software evolution process. Tsinghua University Press.

[4]Zhang, Yousheng Software architecture.Tsinghua University Press2006. PP.183-184.

[5] Xie Zhongwen, Li Tong, Dai Fei, Qin Jianglong, Yu Yong. A paraconsistent meta-model of requirements for software evolution. Journal of Jiangsu University (Natural Science Edition) , 2011,32(5)：562-568.

[6] Zhongwen Xie, Tong Li, Fei Dai, Qian Yu, Yong Yu, Na Zhao and Ping Lu. A Formal Meta-Model of Software Process. Proceedings of the 2nd International Conference on Information Science and Engineering , December 4-6,2010, Hangzhou, China, 4245-4248.

[7] Reisig W (1985)Petri Nets: an introduction, Springer-Verlag, Berlin.

[8] ZENG Jin, SUN Hai-Long, LIU Xu-Dong, DENG Ting, HUAI Jin-Peng. Dynamic Evolution Mechanism for Trustworthy Software Based on Service Composition [J].Journal of Software, Vol.21, No.2, February 2010, pp.261-276.

[9] von de Aalst WMP, von Hee K. Workflow Management Models, Methods,and Systems. Cambridge: The MIT Press, 2002.