Design and Realization of Measurement System for Underwater Equipments

Hao Wang

Dalian Scientific Test & Control Technology Institute, Dalian 116013,China

email:iamwhao19@163.com

Corresponding author:wanghao

Keywords: Underwater Equipment; Sensor; Monitoring; CAN Bus.

Abstract. Underwater equipment auxiliary monitoring is the important premise to ensure system work normally and effective data analysis. This system give full consideration to the output form of all kinds of sensors and realize the net access of different kinds of auxiliary measuring module by using network bus and CAN bus. This paper completed the structure design of the auxiliary measuring system, the interface circuit design of the CAN bus and the network access patterns of all kinds of sensors, realized and verified the auxiliary measuring system for underwater equipments which can monitor the important auxiliary information.

Introduction

With increasing attention of the state to the ocean exploration, different underwater equipments have developed quickly in recent years. Demand of underwater equipments to measure underwater auxiliary information is increasing. With scale expansion and complication of underwater equipments, single-point auxiliary information measurement can not meet the system requirements. For large-scale and distributed underwater equipment, it is very necessary to design a multi-channel underwater auxiliary measurement information collection system.

The underwater equipments mainly focus on auxiliary measurement parameters, including underwater temperature, depth, posture of underwater equipment, overcurrent, over-heat, over-voltage and water leakage alarm. Based on the above consideration, this paper designs the underwater equipment measurement system to collect different underwater auxiliary measurement information to adapt various signal output patterns of underwater sensors.

Network structure of auxiliary measurement system

The auxiliary measurement system connects other system parts via the network and collects data of auxiliary measurement modules of the state monitoring modules such as temperature, depth, posture and water leakage. The logic structure of the system network is shown as the figure 1:

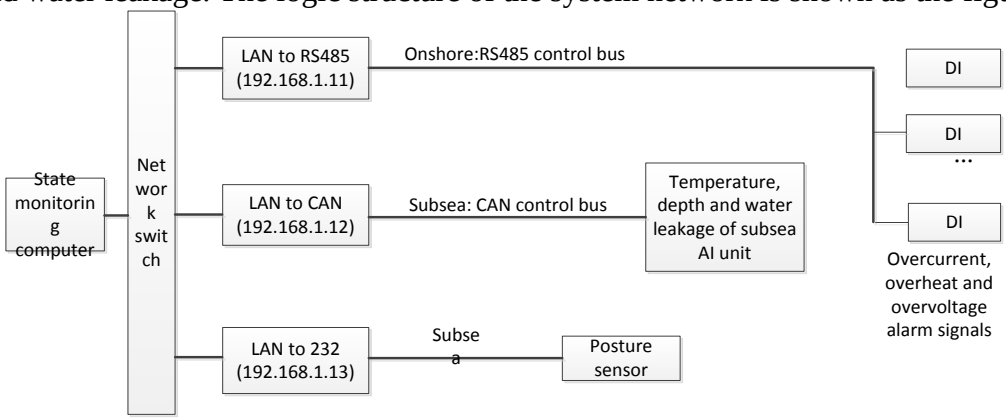

Fig1 auxiliary monitoring system network structure

The system mainly collects data, including water leakage monitoring data of underwater measurement electronic cabin, temperature and depth data of undersea device, posture data of

undersea device, and operation state monitoring data of different amplifiers. The underwater carrier is remote from the abovewater system, so optic fiber is used to remotely transmit information and reduce consumption on the cable. The abovewater systems and underwater carriers are connected via the LAN optical terminal and optic fiber. The network electric signals of TCP/IP protocol are restored in the underwater carrier by using the network switch with optic fiber interface.

The underwater part includes multiple sections and each section includes many data to collect. If routine communication technology is used, a large number of cables will be used, which will make the whole system more complicated. The auxiliary measurement system uses CAN bus communication technology. CAN is one multi-master peer field bus communication system, which connects field devices as a control network to exchange information with each other via the bus and is a two-way serial multi-node digital communication system. CAN will send and receive data among nodes by using two shielding twisted pair cables based on the communication data coding. The CAN bus not only reduces occupied underwater cables, but also simplifies the system and improves system reliability.

To collect AI units of underwater devices by using CAN bus, the interface circuit of CAN bus is designed. The CAN bus interface is composed of micro control units (MCU), CAN bus controller and CAN bus transreceiver. The MCU initializes CAN controller and controls data receiving/sending. SJA1000 from Philips is used as the CAN bus controller, which can complete functions of physical layer and data link layer in CAN bus communication protocol and provide the physical line interface to MUC. SJA1000 can complete data transmission coding and decoding logic, but a CAN bus transreceiver should be added between it and physical bus to increase the differential receiving/transmission capability of the system. PCA82C250 is used as the CAN bus transreceiver, which is extensively used in the world, can generate differential voltage for normal operation of CAN bus, act as the interface between the CAN protocol controller and physical bus, provide differential transmission capability to the bus, offer differential receiving capability to CAN controller. To further enhance anti-disturbance capability of the CAN bus node, the high-speed light coupler 6N137 is used between the CAN bus controller and transreceiver for electric isolation of different nodes in CAN bus. The circuit principle diagram of CAN bus interface is shown as the figure 2.

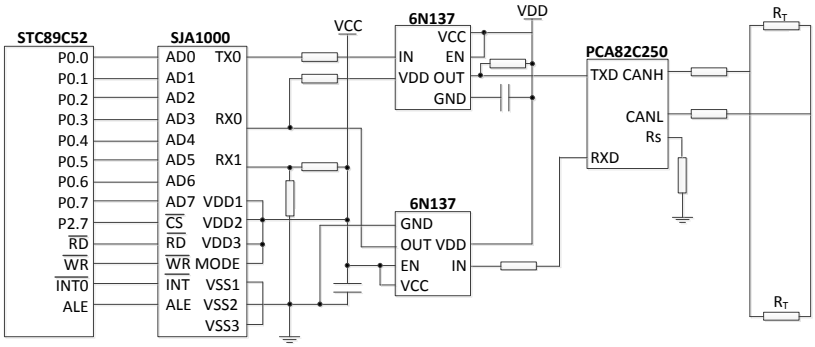

Fig2 CAN bus interface circuit schematic diagram

The sensors with analog output can be connected to the network by combining the CAN bus collection module with the CAN-LAN transformation module. AI unit based on ADS8401 is connected to the CAN bus interface and can collect the analog output data of underwater sensors via CAN bus. The data will be uploaded to the state monitoring computer via LAN-CAN converter and the control instructions of the monitoring computers will be transformed to CAN bus via LAN-CAN transformer and then be sent to underwater collection units. The underwater collection units will collect, terminate collection and upload data according to the instructions from the upper device.

Sensors, which output data via RS232, are connected to the network by using LAN-232 converter. The LAN-232 converter can convert the control collection instructions of the monitoring computer into RS232. The sensor unit is connected to this RS232 interface and corresponding actions are performed according to the instructions from RS232 interface. The collected data is

uploaded to the state monitoring computer.

If the sensors output TTL level signals, the auxiliary measurement system connects the DI units via RS485 bus. The DI unit is connected to RS484 interface. The output level signals to collect are connected to the specified channel of the specified DI unit. With RS485 bus, the upper monitoring computer reads the input terminal states of DI units to monitor these signals.

Network connection of sensors

Temperature and depth collection module. The CYW-007 temperature and depth sensor measures the pressure by using the diffusing silicon pressure sensitive components and integrated circuits. The platinum resistor and integrated circuit measures the temperature. The shell is designed as the fully stainless waterproof structure and features small volume, high precision and good stability, so it is suitable for the temperature and depth collection of underwater equipment. Its depth measurement range can reach 100m and the precision is 0.5%. The temperature measurement range is 0-50℃ and the precision is 0.5℃. The depth and temperature output signals are 4-20mA current signals. After 250Ω sampling resistor is connected, the sampling resistor can get 1-5V voltage output signals in actual operation.

When the temperature and depth data is collected, the sampled voltage signals are connected to AI unit. The collected data is sent to the state monitoring computer via the network. These states can be collected to know the temperature and depth information data of the underwater carrier in time. The structure framework of the temperature and depth collection unit is shown as the figure 3.

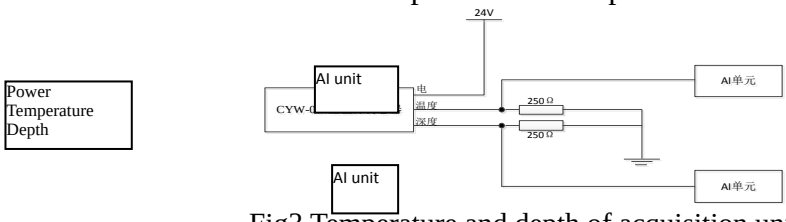

Fig3 Temperature and depth of acquisition unit

Posture collection module. HMR3000 posture sensor is the digital Compass module of Honeywell, which provides the azimuth information via the magnetic resistance sensor and two-shaft inclination sensor and features low price and convenient purchase. This sensor realizes data communication by using RS232 interface, so it can not output analog values and can not be connected to CAN bus. Only the nearest first underwater electronic cabin from the shore equipment is installed with this sensor. When this sensor is used for posture collection, a LAN-RS232 converter is used. Its RS232 end is connected with HMR3000 posture sensor. Another end is connected with LAN. With this connection mode, the monitoring computer can collect data from HMR3000 posture sensor via LAN network.

3DM-HD posture sensor is used to collect the posture data in other underwater carriers. 3DM-HD outputs analog values. For this form, LAN-CAN converter is used to connect the 3DM-HD network. The sensor signals are connected to the AI unit inside the underwater sealing electronic cabin. With LAN-CAN converter, the control collection instruction of the monitoring computer is converted to CAN bus. The analog input unit (AI) is connected to the CAN bus interface. The collected data is uploaded to the state monitoring computer according to the instruction actions from CAN bus interface.

Water leakage monitoring module. The water leakage induction line of the water leakage monitoring unit sensor includes two parallel leads, which are packed into the water-absorptive insulation materials. Two leads are insulated under normal state and the resistance between two leads is very high. When water leaks, the resistance of the water-absorptive insulation materials will decline quickly due to water absorption, so the resistance between two leads will reduce. The water leakage can be detected via detecting change of resistance between two leads. Once water soaking is detected, an alarm is given and the alarm level signal is outputted. The upper device system will collect alarms.

The water leakage monitoring unit detects water leakage via the comparer LM2903. The

LM2903 is a low-offset voltage precise comparer and includes two independent comparer units. The chip can operate within 2V-36V wide voltage. The range of the differential input voltage can reach the power voltage. The chip outputs via OC. A proper up pull resistor can be connected at the output end on demand. To detect the resistance change of the water leakage induction line, a big resistor and water leakage induction lines are used to compose a voltage division circuit. The divided voltage is connected to “-” input end of the comparer. The “+” input end of the comparer is connected to the voltage division network. One feedback resistor is used to compose a small-amplitude hysteresis voltage.

The resistor of the water leakage induction line is very high under a normal state, so the voltage is very small after voltage division and a high level is outputted. When water leaks, the resistance of the water-absorptive insulation coat of the water leakage induction line will quickly reduce to water absorption. The divided voltage will become higher than the “+” end voltage of the comparer and the comparer outputs the low level. After this low level is collected by AI unit of the CAN bus, the auxiliary measurement system will give the water leakage alarm signal.

Overcurrent, overheat and overvoltage alarm module. The offshore equipment can give overcurrent, over heat and over voltage alarm. The monitoring part of the alarm signal is shown as the figure 4:

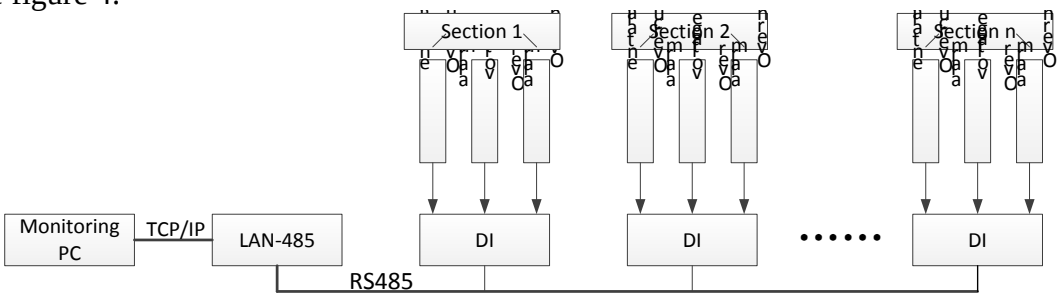

Fig4 alarm monitoring unit

These equipment will output TTL level signals as state indication signals. Multiple DI units connected to RS485 interface will collect these signals and send the collected information to the monitoring computer via the network. These states are collected to know the current operation state of the device and ensure normal operation.

System Verification

The performance of the underwater auxiliary measurement system is verified by using the ocean test. The auxiliary measurement system continuously provides auxiliary measurement data to the state monitoring computer in the test. The temperature, depth and posture data of the system are stable and the temperature and depths of different equipment keep rough consistent. No water leakage and overcurrent occurs in test. The underwater equipment operates stably. The system’s auxiliary measurement information is shown as the figure 5:

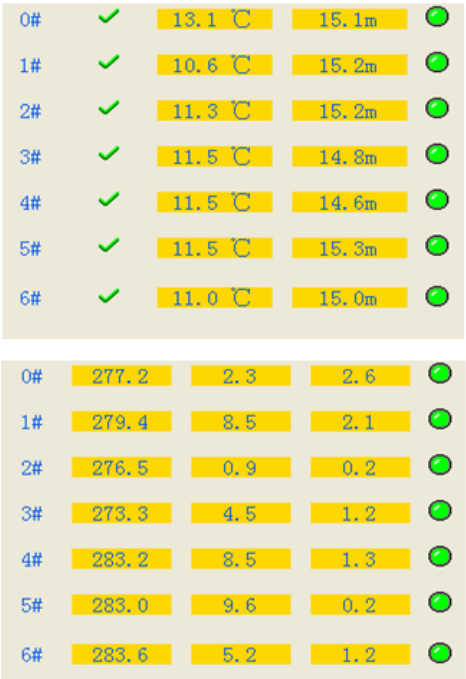

Fig5 auxiliary measuring information display interface

Conclusions

This paper designs an auxiliary measurement system suitable for underwater equipment based on the network bus and CAN bus according to output forms of different sensor modules. The system can collect and display temperature, depth, posture, water leakage, overcurrent, over heat and over voltage alarms of multiple underwater nodes under limited water resources. The system functions are verified via the experiments.

References

[1] S. Yan, Digital electronic technology base, Beijing: Higher education press, 2005

[2] N.B. Zou, Multi-channel data acquisition system based on single chip design,Instrument and meter,2011

[3] J. Yang. Design of CAN Bus Interface Circuit. Office Informatization. 2010, (1): 34-45

[4] M. Hou, Y. Du. Interface Circuit Design Based on CAN Bus. Communication technology. 2008(7):138-140

[5] Q.K. Song, J.C. Jing. The Design of CAN-BUS Nodes Based on theAT89C52 SCM. Techniques of Automation and Applications. 2009,28(5):55-68

[6] Y. Zeng, Y. Liu. Bearing data acquisition system based on RS232 interface. The age of electricity, 2011