Surface Profile Measurement System Based on Incoherent Optical Feedback

Zhang Zhijun

Weifang University of Science & Technology, Shandong, Shouguang262700

hunter2011@foxmail.com

Keywords: Optical feedback, Surface profile measurement, Non-contact measurement system, Three-dimensional scanning imaging.

Abstract. Optical feedback effect has been widely applied to external cavity laser, and it has achieved good effect in narrowing the spectral line of laser. And the measurement technique based on optical feedback effect attracts the attention of the researchers. The measurement system based on optical feedback effect has the advantages of small volume, compact structure and low cost, so the research of applying it to actual measurement is very important. The papermakes deep research on the theory and experiment of surface profile measurement system based on incoherent optical feedback of semiconductor laser, which achieves some experiment results.

Introduction

The measurement system based on optical feedback feature of semiconductor laser has evident advantages for instrument miniaturization and integration. The method has been widely applied to displacement measurement, velocity measurement, vibration measurement, distance measurement, angular measurement and topography measurement. The paper mainly describes the components of topography measurement, which includes optical system, data signal acquisition system, temperature control system, stepping motor displacement driving system and drive circuit.

Optical System

The system consists of simple optical instrument. The characteristics are that light path is easy, the output light and the feedback light uses the same light path and the anti-vibration ability of the system is great. As spatial filter, laser not only filters the influence of stray light, but also is the standard of coupling efficiency of the feedback light.

The paper uses the laser produced by Xi'an Situo Photoelectricity. The laser diode is produces by Sharp Corporation, the emitting power of the single-mode laser is 10mW, and the central wavelength is 650nm. The exit light power is about 5mW, and the point-like facula about ϕ *0.3mm* is generated. The threshold current is 28mA, the working current is 35mA, and the working voltage is 3.3V. PIN photosensitive diode is encapsulated in the laser, and it and the laser compose common anode structure. It is generally used to detect the optical power of laser. The output signal connects with APC and ACC circuit, which can implement that optical power is influenced by the temperature to generate auto correction of drifting. And it is used to measure the system signal in the paper. NA of lens is 0.29 and the aperture is Ca=5.0mm.

The measured samples are placed in the focus of the system prism, and all parallel light exited from the laser is focused on the focal position. The light path has reversibility, so the feedback intensity is the greatest. Under the condition without considering scattering, all exited laser can return to resonant cavity of the laser, which can form optical feedback. While the samples leave the focal position, the feedback intensity reduces rapidly.

In other words, the light which is emitted from the source bed of the laser can form a small punctiform facula on the focus. The light path is reversible, so reversing the image relationship can know the size of facula on the source bed. When the samples generate defocus amount, the facula on the source bed increases, and the coupling strength reduces rapidly. Therefore, when the surface

of the samples is scanned, the concave-convex change of surface topography will change the strength of feedback light. And the output of laser is changed, and the signal of photoelectric detector is changed, which achieves surface topography information of samples.

Feedback strength not only relates to the focal length and numerical aperture of lens, but also relates to echoing characteristics of the surface of the samples. The echoing characteristics are generally divided into complete scattering, complete inflection and incomplete inflection.

When the incident ray is incident on the surface of the objects, the space scattering light of the object for the incident ray is represented by the following formula, which is called complete scatterer.

$I_s(\phi) = I_0 \cos\phi$ (1)

ϕ means the angle of the direction of the scattering light and the object towards $\vec{n}$, $I_s(\phi)$ means the scattering light strength of ϕ direction, and $I_0$is the optical strength of the object.

The above formula is called Lambert law. For non-absorbing non-transparency medium, the total energy of scattered field should be equal to the energy of the incident filed. The distribution of scattered light of complete scattering surface has no relationship with the incident angle of the incident light, and is only determined by the position of scattering surface normal on the space.

Mirror plane or object surface receiving even process meets the reflection law.

$I_n(\phi) = I_r \delta(\phi - i)$ (2)

The light intensity of reflection in ϕ direction is $I_n(\phi)$, the incident angle is i, and the light light intensity of reflection in i direction is I_r.

In reflection law, only the direction of $\theta = i$ has reflected light, and there is no reflected light or scattered light in other directions.

Generally speaking, the surface without process has incomplete scattering feature, and it meets Sparrow hypothesis that the light beam which is incident on the surface of the objects has two different parts. The first part is the absorption of photon which is incident in the objects, and the photon which is not absorbed leaves the surface of the objects and is emitted in any direction. The second part is the emission of the surface of the object. The distribution of the scattered light is

$$I(\phi) = I_r(\phi) + I_s(\phi) \quad (3)$$

The light intensity of reflection is $I_n(\phi)$, and that of scattering is $I_s(\phi)$. The light intensity of scattering in ϕ direction is $I(\phi)$.

Phong Bui-Tuong analyzed the statistic feature of object surface, and proposed an incomplete reflection model for Phong model.

$$I(\phi) = I_0 \cos^n \phi \qquad (4)$$

The light intensity of the incident light in reflection light direction is I_0. The coefficient relating to material and surface roughness is n.

From the above analysis, we can see that the reflection ability of different surfaces is different, and there is great difference for feedback ability. Complete scattering surface is not sensitive to the incident angle, and the single feedback intensity is the smallest. The feedback intensity of reflective surface is greater, but it is sensitive to the incident and reflection angle. And incomplete reflective surface is in the compromise position. In the experiment, proper reflective surface is selected under different experiment conditions.

Temperature Control System

All semiconductor lasers are very sensitive to the temperature. The change of external temperature makes the output power of laser reduce and makes oscillation shift. The shining of LD makes the temperature change, and makes radiation wavelength sift, which not only makes it not match with absorption peak of the gain medium, but also makes conversion efficiency reduce [44].

We can see that temperature is very important for each measurement system with semiconductor laser as light source. In order to ensure that the output optical power and the light frequency keeps

stable when it is measured, the temperature should be controlled within 0.05℃, and higher accuracy is required is some occasions. For the system which is mainly influenced by environment temperature, the change of environment temperature is a slow process, so the control system with slow response can be used such as first-order delay link. For the pulse light source like Q laser, the control means with rapid response are required such as PID control.

From Figure 1, we can see that the smaller the temperature difference ΔT is, the larger the refrigerating capacity Q_c is. The greater the temperature difference ΔT is, the smaller the refrigerating capacity Q_c is. The feature is determined by the working principle of TEC. With the increase of temperature difference, it is more difficult to transport the heat from the hot end to the cold end, and the refrigerating capacity reduces. Therefore, in actual application, the hot-cold end should be kept for smaller temperature difference, which makes the refrigerating effect better. So the heat dissipation measure of the hot end is an important link.

Fig. 1 also proves the importance of the maximum working current, and larger working current can have better refrigerating effect.

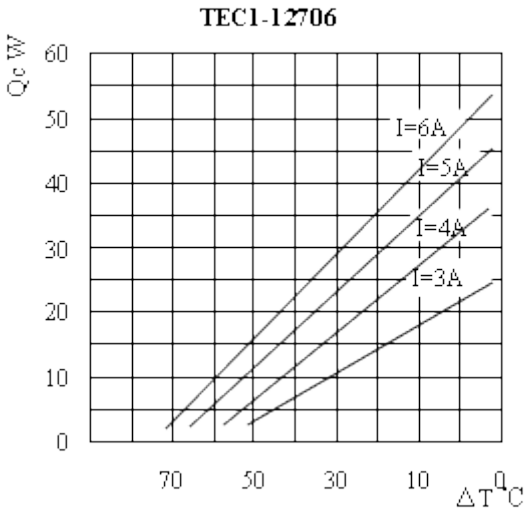

Fig. 1 Relationship between temperature difference ΔT at the cold and hot end and cooling capacity Q_c

The volume of TEC is 30mm x 30mm x 4.9mm, the maximum working current is 3A, the maximum working voltage is 8.5V, and the maximal cooling capacity is 14.9W, which has met the temperature control requirement of laser. TEC ADN8830 of AD company is used as the control chip of TEC, and the temperature control accuracy can achieve ±0.01℃.

Stepping Motor Displacement Driving System

In order to scan the surface of the samples, the paper uses SC3 stepping motor displacement driving system. It can realize the sample scanning in two directions. And it has manual and automatic mode. In the paper, SC3 and Labview procedure is used together, which implements automatic measurement of computer control.

The parameters of stepping motor in two directions are as follows.

Figure 2 Stepping motor parameters

		range	screw lead	stepping angle
horizontal direction	TSA30-C	30mm	1mm	1.8°
vertical direction	TSA100-A	100mm	4mm	0.9°

The displacement unit of stepping motor is step. Every step of stepping motor means that the displacement of electromigration is equal to pulse equivalent, resolution ratio. According to the parameters in Figure 2, the following formula can be used to figure out the distance that stepping motor moves for each step.

Translation stage pulse equivalent（resolution ratio mm）=screw lead mm*stepping angle /（360* subdivision number） （5）

Subdivision number is set by dial switch of real panel of the controller. If the velocity is N, the actual displacement (mm) is equivalent to N*pulse equivalent.

Drive Circuit of Laser

In order to make laser emit stable and continuous laser, it needs a stable and high signal-noise ratio drive circuit. The design of drive circuit must consider that the working current of laser can be adjusted, and the adjustment range should be 30% of the normal working current. And it needs to ensure that when the operation is over-graduated, the laser can't be burnt out. The stability of current should be good. The generation of ripple wave may influence the output power and central frequency of laser, which influences the accuracy of measurement results. The circuit structure should be simple to meet the advantage of instrument miniaturization.

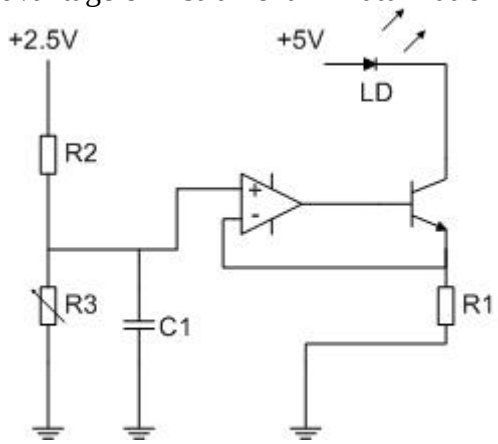

Fig. 3 Driver circuit of laser

Fig. 3 is the drive circuit principle of laser. It consists of main circuit and potentiometer control circuit. The main circuit consists of LD, audion and R1 resistance. The current of LD loop is determined by the potential of R1. The function of audion is to compose a feedback loop with operational amplifier, current follower, which can make the current of LC loop is controlled in1%. The other function of audion is to control switching state of LD loop, which realizes pulse shining of LD.

The potential control circuit part consists of R2 resistance, R3 adjustable resistance and C1 capacitance.R2 and R3 resistance has partial pressure for 2.5V and inputs it to the positive terminal. The potential is passed to the R1 end, and breaks over audion, which realizes controlling main circuit. C1 capacitance is used to filter out the ripple wave, which makes the current of LD more stable.

The resistance of R1 is 10Ω. The working current of LD is only 35mA, so the potential of R1 is 350mV, which makes the measurement and adjustment easy. Setting the adjustable resistance of R3 on the end which is close to the ground can make the calculation and adjustment easy. Rationally setting the resistance range of R2 resistance can avoid that too large current of laser makes laser burn out.

$$V_{+} = V_{-} = 2.5 - \frac{R2}{R2 + R3} \times 2.5 \qquad (6)$$

V_{+} and V_{-} is the potential value of the positive end and the negative end. By measurement, the voltage of the negative and positive end has the difference of 3mV. The difference value is fixable in the required range, so it can be ignored, which has no influence on the measurement.

Digital Signal Acquisition System

The signals acquired by PD require a simple and reliable system to be input the computer for calculation and analysis. The paper uses PCI-6111 DAQ of NI Corporation for acquisition. The interface of the acquisition card is complete, has the functions of simulation input AI, simulation output AO, digital input/output DI/O and time input/output TI/O.

The characteristics of Labview include interactive figures, humanized interface and great figure programming language. Data acquisition is the core of Labview procedure, and it can realize most control programs by data acquisition card and data acquisition function.

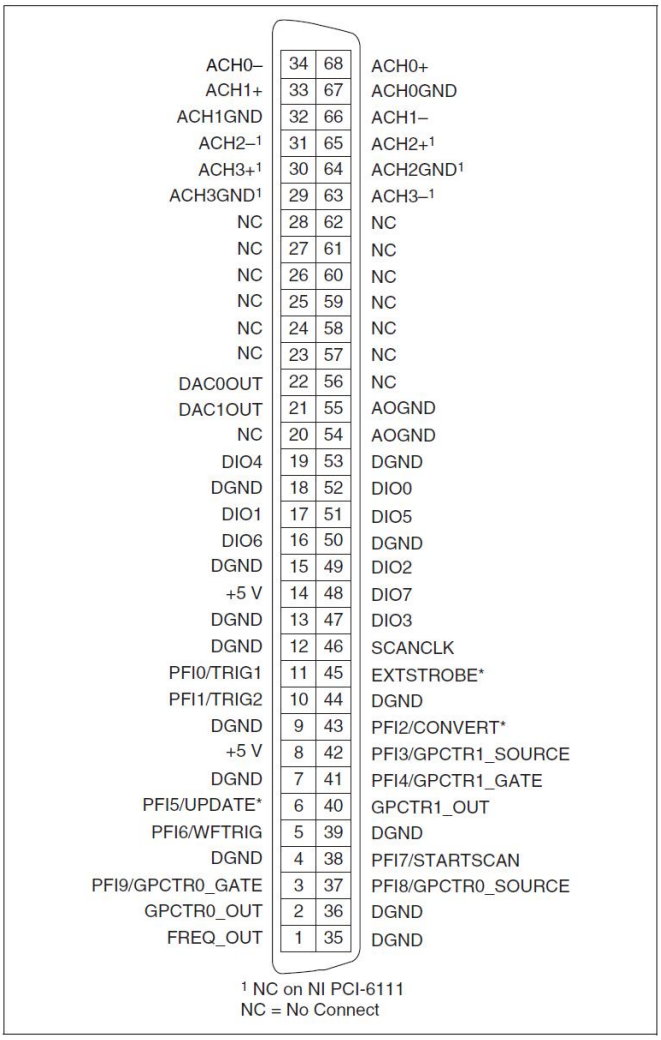

Fig. 4 PCI-6111 interface

Fig. 4 describes I/O connection of NI PCI-6111. Selecting appropriate pins can realize acquisition, control, comparison and difference, which is great function. When the wires are connected, it needs to be noticed that the inputted signal amplitude can't be greater than the maximal signal value of the pins, or it makes irreparable damage on the data acquisition card.

We need to know the functions of data acquisition channel before using it, The input channel ACH（0~3）+ of NI PCI-6111 is configured into pseudo-difference. The input signal of each channel is connected on the positive end. Each reference signal ACH（0~3）- is connected on the negative end. When it is not public loop, the input signals are differential. Reference signal interface ACH（0~3）- not only can input signals, but also can input direct-current level, which can be used to compare with the input signal ACH（0~3）+. Pseudo-difference signal connection not only can reduce the noise, but also can increase the noise insulation under common mode. The mode also allows that the input signal can fluctuate in the potential restriction range under common mode.

The instrument potentials of NI PCI-6111 have the isolation function of amplification and common noise, and can make the input signal separate from other AI signals. NI PCI-6111 has two pseudo-difference simulation acquisition channels. The conversion accuracy of A/D sampling is 12 bit, the highest sampling frequency is 5MS/s, the minimal sampling frequency is 1kS/s, and the input coupled mode includes direct current and alternating current.

Reference

[1] King P, Steward G J. Metrology with an optical maser. New Sci , 1963 , 17: 180

[2] Olsson A, Tang C L. Coherent optical interference effects in external-cavity semiconductor lasers. IEEE J . Quantum Electron, 1981, QE-17: 1320~1323

[3] Rudd M. J., A laser Doppler velocimeter employing the laser as a mixer-oscillator. Sci. lnstrum. , 1968, 1: 723~726

[4] Sacher J, Elsasser W, Goble E. Intermittency in the coherence collapse of a semiconductor laser with external feedback. 1989, 63: 2224~2227

[5] Tromborg B, Mork J. Nonlinear injection locking dynamics and the onset of coherence collapse in external cavity laser. IEEE J. Quantum Electron, 1990, 26: 642~654

[6] W.M. Wang, Boyle W J O, Grattan K T V. Self-mixing interference in a diode laser: Experimental observations and theoretical analysis. Appl. Opt., 1993, 32: 1551~1558