DAIMD: An Improved Multimedia Stream Congestion Control Algorithm

Fuzhe Zhao[1, a *], Yuqing Huang[2,b], Zhiyong Tan[3,c], BingxinXue[4,d]

[1]School ofComputer, Central China normal university,Wuhan,Hubei province,China

[a]zhaofzh@mail.ccnu.edu.cn

Keywords: Multimedia stream; Transport protocol; TCP-like congestion control algorithm; improved algorithm

Abstract. In this paper, we analyze the problems of current congestion control algorithm based on TCP protocol and UDP protocol for transmitting multimedia stream, and proposed an improved multimedia stream congestion control algorithm DAIMD.DAIMD adopt TCP-like congestion control algorithm to transmit multimedia stream based on RTP protocol. DAIMD improved the rate of window changes and control the rate of sending end in order to make it consistent with the change of the window, at the same time DAIMD control the minimum rate of the sending end, so as to achieve the smoothness and continuity of the multimedia stream. The experiments results demonstrate that the DAIMD effectively reduced the jitters amplitude, reached a higher PSNR(Peak Signal to Noise Ratio)and the DAIMD is more suitable for the transmission of the multimedia stream than the traditional AIMD algorithm.

Introduction

Compared with the file transfer, the multimedia stream transfer has high demands of real time transmission, continuity and smoothness with low latency and the transmission reliability requirement. Meanwhile, it occupies a bigger bandwidth with the transmission error being allowed and discontinuous and display chaos phenomenon not being allowed for re-transmitted reason.

Due to the above characteristics of multimedia stream transmission, the transmission of multimedia stream cannot be controlled by TCP protocol. When congestion occurs, TCP will take the congestion control to limit the flow sending, while UDP without congestion control can take over the resources of TCP flows and occupy a lot of bandwidth which is easy to cause the system serious congestion and even collapse, therefore, the UDP protocol is not suitable for transmitting multimedia stream.

There are several congestion control algorithm for multimedia stream: one is based on TCP protocol, which can transmit multimedia streams without causing disorder and jitters[2]; the second is based on UDP protocol which include a congestion control algorithm; third, using the Data-gram Congestion Control Protocol DCCP (Data-gram Congestion Control Protocol)[3].

In this paper, improved TCP protocol using the way of removing the TCP protocol re-transmission scheme and error control algorithm is proposed. However, due to the realization difficulties, this approach is implanted by few application developers. UDP protocol added congestion control is based on TCP congestion mechanism. According to AIMD (additive increase multiplicative decrease) algorithm[4], to improve its increasing of step length and decreasing multiples to ensure a relatively smooth rate, however, due to the AIMD used, each packet loss will cause varying sliding window, the rate of the sending end fierce fluctuations. The new transport protocol DCCP was proposed by the IETF for an alternative UDP protocol for multimedia streaming of low overhead[3]. DCCP is a combination of the characteristics of UDP unreliable transmission and TCP congestion control ability which provides two available algorithms CCID2 (the TCP-like congestion control) and CCID3 (TCP Friendly Rate Control)[3].CCID2 is based on window and includes slow start, congestion avoidance and re-transmission timeout, and so on, which is similar to TCP congestion window.CCID3 is based on TFRC equation, the sending end through packet loss and round-trip time RTT to calculate the maximum transmission rate. This algorithm is more stable than the congestion window algorithm that the transmission rate can quickly converge with therelatively high throughput.

TCP-like congestion control algorithm[5]was proposed that is based on RTP/RTCP protocol, which made appropriate improvements on TCP congestion control mechanism. For the RTP is a lightweight protocol which is based on UDP, it not only provides a detection method for the transmission of multimedia stream, but also provides a measure of packet loss estimation. Meanwhile RTCP also have provided for the entire transmission process control and monitoring functions.

The remaining of this paper is organized as follows. In the 'Algorithm principle' section, the TCP-like algorithm structure mode and the AIMD algorithm are introduced. The parameters condition of improved algorithm is given in the 'Improved Algorithm' section. Simulation results are presented in the 'Simulation' section. Finally, we conclude the paper in the 'Conclusion and Future Work' section.

Algorithm Principle

The TCP-like algorithm is mainly composed of five parts: sender control module, window control module, clock control module, receiving module, and confirmed module. The five parts works as follows:

(1) Sender control module

This module sends the streaming media data from the encoder and this module is controlled by the window control module.

(2) Window control module

This module based on the confirm frame which is sent by the confirm module of the receiving end and the clock control module to adjust the window size.

(3) Clock control module

This module calculates the acknowledgment timeout clock, timing and providing timeout message.

(4) Receiving module

This module receives data frames which is sent by the sender control module, and sends the message of receiving data frame to the confirm module.

(5) Confirm module

This module sends confirmation to the sending end.

The TCP-like algorithm structure model is shown in Fig. 1.

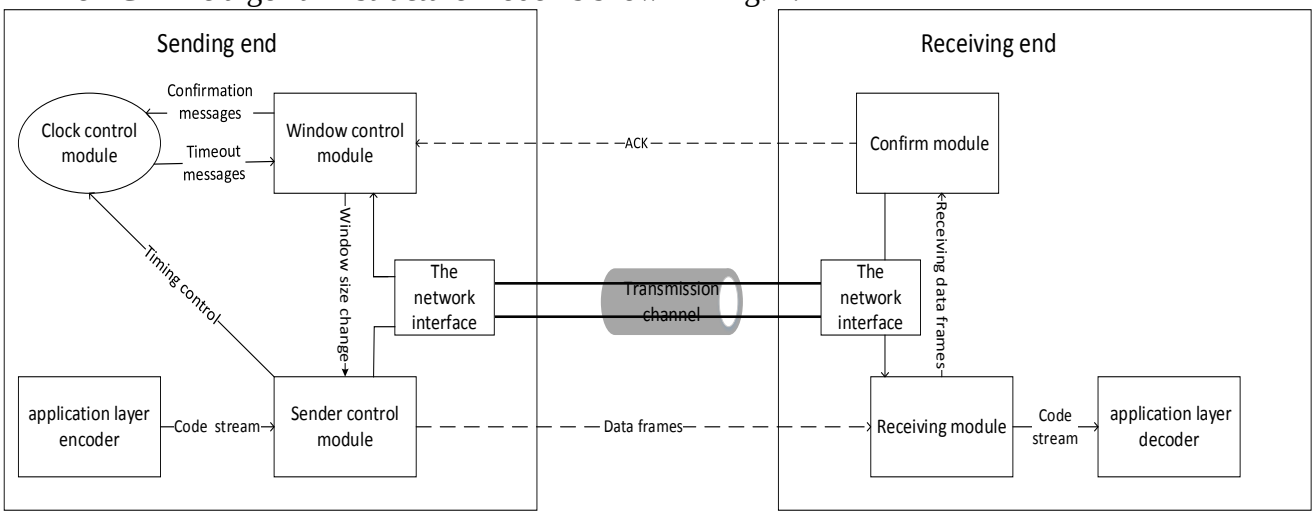

Fig.1 TCP-like algorithm structure model

TCP confirmation mechanism is used to improve the TCP-like algorithm[5]. When the receiving end received the predetermined numbers of RTP frames which is needed by the feedback, it sends receiving RTCP(SR, RR frame) reports to acknowledge the last received data frame to the sender; sending end uses AIMD algorithm adjust window size and the RTP data frame transmission rate. At the same time, this model completely abandons the TCP re-transmission mechanism, and prevents

further congestion caused by re-transmission and transmission pause caused by waiting for a long time. When the congestion occurs, it accesses to quick recovery phase directly.

Window size based on the round-trip time RTT which is included in the RTCP feedback package to determine whether congestion occurs, while the window changes calculated by the AIMD algorithm [6]:

$$I:\ W_{t+r}=W_t+\alpha 1, \alpha 1>0. \quad (1)$$

$$D: W_{t+r}=\beta 1 * W_t,\ 0<\beta 1<1. \quad (2)$$

Where I is an increase algorithm of the change of window size which is caused by the confirm packet ACK received in a RTT time; W_t be the window size of time t; W_{t+r} represents after time t and a round time the window size; r be loop response time; α1 be plus growth factor, a constant; D be window size reduction algorithm after congestion occurs; β1 be the multiplicative decrease parameter value which is a constant.

The sending end adjusts transmission rate controlled by window control module which is based on the feedback.

Timeout clock control module mainly calculates the confirmation timeout clock value. In the case of no timeout occurs, the timeout clock is calculated as follows:

$$T=RTT+4*N. \quad (3)$$

$$N=(1—\beta)N+\beta*|RTT-M|. \quad (4)$$

$$RTT=\alpha*RTT'+(1-\alpha)*RTT_{sample}\ . \quad (5)$$

$$RTT_{sample}=t\_rcv-t\_lsv-t\_delay. \quad (6)$$

Where α,βare noted as constants1/8,1/4 respectively. Let RTT be round-trip time, N be offset which is to make RTT smoother, Mbe round-trip time which is measured no timeout occurs recently, RTT' be the round-trip time of last packet, RTT_{sample}be the actual sample value of RTT, t_rcvbe the time of receiving RR packet, t_lsvbe the time of sending SR packet, t_delay be the packet delay time on the link road.

Improved Algorithm

This paper improved the way of judging whether the state of congestion avoidance is or not. At the same time, this paper improved the AIMD algorithm, so that the change of window size can control the sender's sending rate smoothly.

Meanwhile, during playing multimedia stream, the receiver will often play pause when the playing rate of general multimedia stream is lower than the minimum rate for the receiving buffer is in a "starvation" state. This pause could not meet the users' requirement for playing it, so there is a request for the guaranteed minimum rate in general multimedia stream. Therefore, this paper set up a control for the minimum rate of the sender.

We denote the improved algorithm as DAIMD.

The packet loss rate p is used to determine whether congestion occurs. But using p as a feedback control parameter cannot reflect the current network status which only reflects the condition of the network at a time. So the packet loss rate p is needed to be improved.

Take the first three times packet loss rate P1, P2, P3, Wi (i>=1 and i<=3) as a weighted value, W1 =0.2, W2 = 0.3, W3 = 0.5. The current network is calculated by the equations(7):

$$P=P1*W1+P2*W2+P3*W3. \quad (7)$$

Denotetwo packet loss rate thresholds Pmin and Pmax, where Pmin be the minimum packet loss rate threshold, Pmax be the packet loss rate when congestion occurs.

$$\begin{cases} P < Pmin, & T = 0 \\ P > Pmax, & T = 1 \\ Pmin \le P \le Pmax, & 0 \le T \le 1 \end{cases} \quad (8)$$

Where T is a congestion flag. If T equals 0, it means the packet loss rate is caused by network

error; if T equals 1,it means the packet loss rate is caused by the network congestion; if T is in the middle of 0 and 1,it means the network is normal transmission.

DAIMD modified the value of the constant α1,β1,so that they gradually decreases over time, eventually make the window change tends to smooth and decrease the sender rate jitters.Denoteα(t) as an additive factor of time t, Denoteβ(t) as a multiplicative factor of time t,attime t:

$$\begin{cases} I: Wt + r = Wt + \alpha(t) \\ D: Wt + r = Wt + \beta(t) \end{cases} \tag{9}$$

whereα(t),β(t) are no longer constants but decreasing the value over time. Denote η,μ both beconstant correction factor.

$$\begin{cases} \alpha(t) = \alpha e^{-\eta\frac{1}{t}} & ,\alpha > 0 \\ \beta(t) = \beta^{\mu\frac{1}{t}} & ,0 < \beta < 1 \end{cases} \tag{10}$$

Under the control of window control module, the following the sender rate control method is proposed to limit the rate of the sender, to keep consistent with window changes and to avoid a large number of losing packet events happened on the sender.

```
if  (P<Min)
        R=Rmax;
    Else if (P>Pmax)
                R=min(R*β(t), Rmin);
        Else
                R=max (α(t)*R, Rmax)
```

Where R is the sending rate; Rmax be the peak rate of the sender ever sent, Rmin be the minimum rate of the sender ever sent, when the window received the RTCP feedback packet from the receiver, the rate of the sender will change as the change of the window size synchronously.

Simulation

My Evalvid is a new set of tools which is to integrate the Evalvid and the NS2[7].Researchers can through the actual network or simulation experiments on my Evalvid structure to verify the multimedia transmission quality which is influenced by the proposed network-related mechanism.

In order to study the DAIMD algorithm performance in the application and compare the TCP-like algorithm and DAIMD algorithm based on RTP and analog in my Evalvid Tools group, the network topology structure is used and shownFig.2.

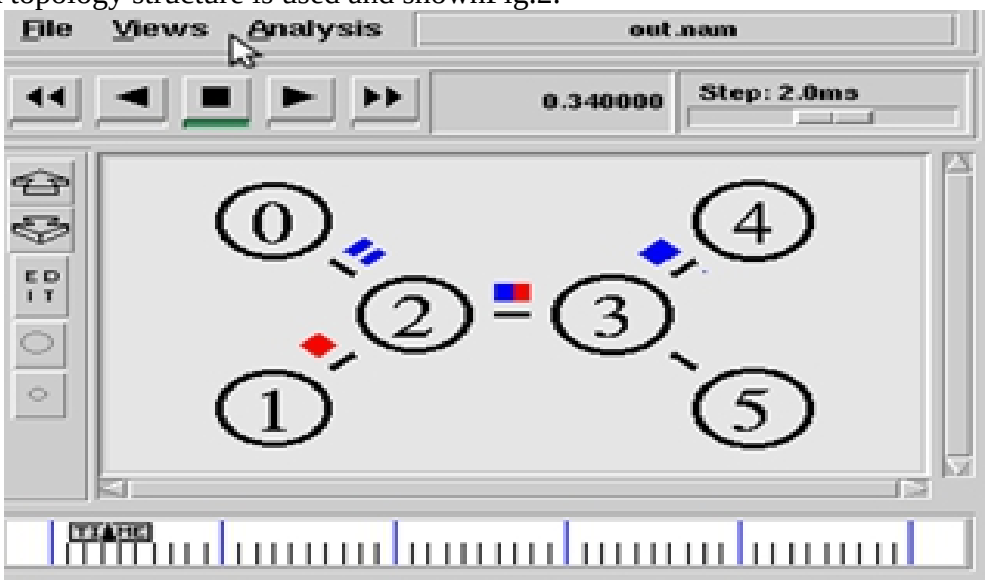

Fig .2 network topology

In Fig.2,node 2 and node 3 are two routers which the link between them is the bottleneck of the network with the bandwidth of 5 MBPS, delay of 5ms, all the rest of the link bandwidth to 15 MBPS, delays 5ms.REDmechanism is used in congestion control link queue. We create a TCP stream between node 0 and node 4.On node 0,we run a TCP agency and data source set as FTP. Between node 1 and node 5,we run a RTP agency and use a CBRdata source to take the place of multimedia stream. We use TCP-like congestion algorithm and DAIMD algorithm respectively as congestion control algorithm. Packet length of each stream is 1000B with simulation time 1000ms.In the experiment, FTP flow starts transmitting at200ms, end at800ms, which period called congestion time. Through repeated experiments, the loss threshold value is set as0.075whichreflectsthe degree of congestion more accurately.

This paper firstly uses the NS2 software to simulate the jitter of these algorithms shown in Fig.3.

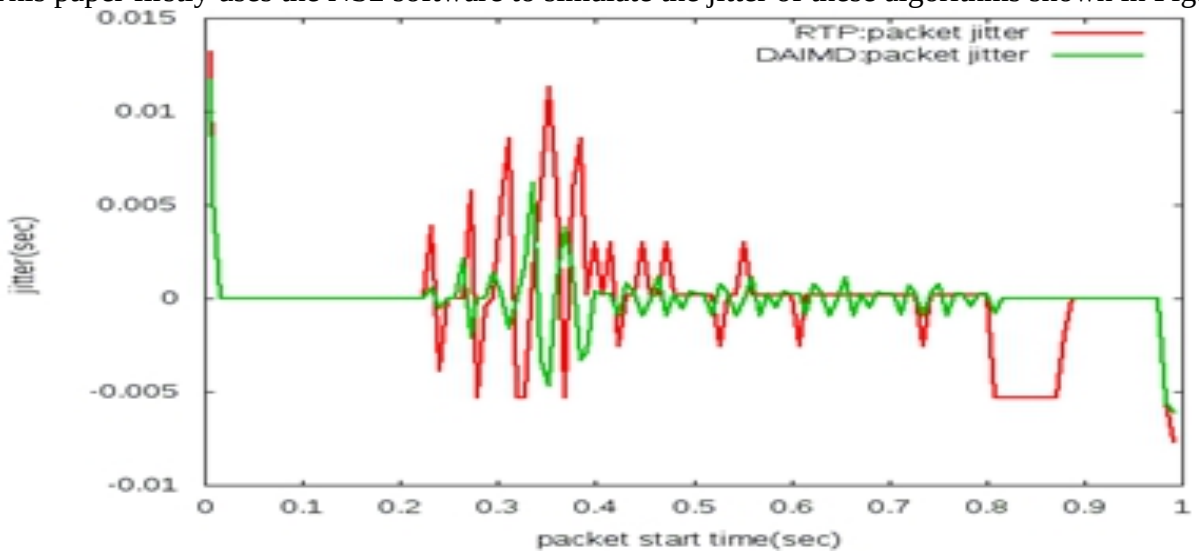

Fig.3comparison of both algorithms on jitter

As it can be seen from the Fig.4, the improved algorithm has a great improvement on the jitters amplitude. Due to constantly adjust the size of window control the sending rate by DAIMD. In addition, the network give full play to the role of the RED in the network layer with the congestion controlled to a certain extent.

The video record files of Video file src01_640x360areused to verify the algotithms. Again, we make the files as trace files and import it into the NS2.NS2uses the TCP-like algorithm and DAIMD algorithm based on RTP protocol to simulate the trace file. We use my Evalvid to verify the multimedia network structure and calculate the PSNR(Peak Signal to Noise Ratio) value of the each film after rebuilt and then to observe the differences of the two film, so as to evaluate the algorithm is good or bad subjectively, as shown in Fig.4.

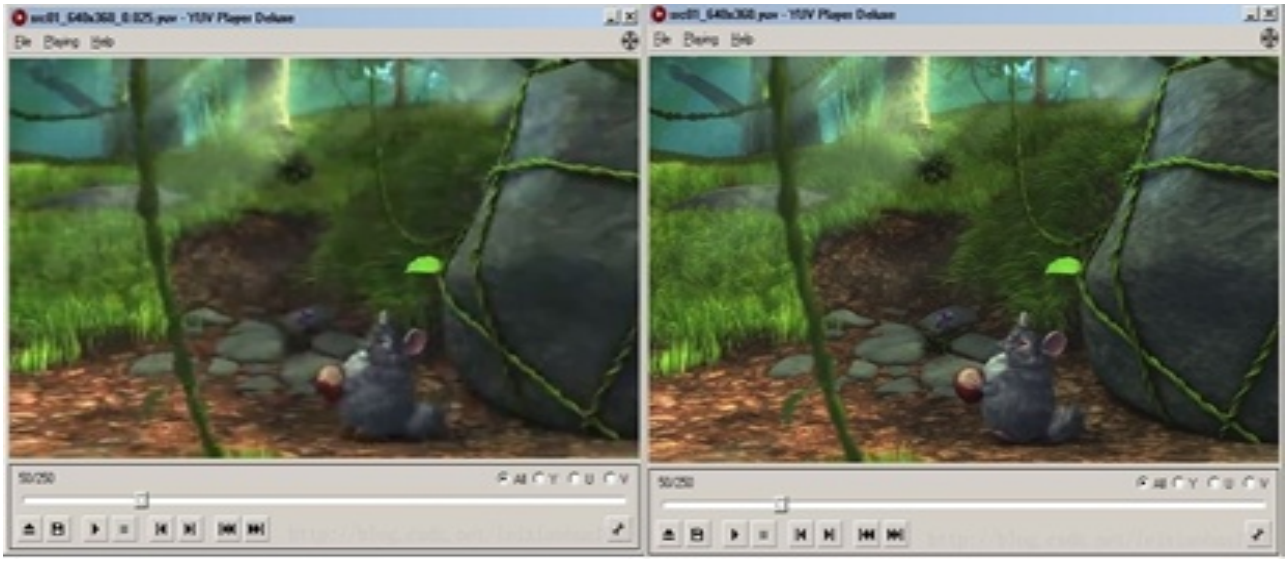

Fig .4 the image comparison of two kinds of algorithm on reconstruction (left TCP-like algorithms, right DAIMD algorithm)

In Fig.4,the image on the left is an effect of TCP-like algorithm transmitted over the network. The image on the right is the effect DAIMD algorithm image transmission over the network. Here, we only take out one PSNR to compare. Observed from fig. 5 the image on the right is better than the image quality on the left.

Conclusion and Future Work

This paper proposes an improved TCP-like algorithm DAIMD algorithm based on RTP. The DAIMD algorithm can greatly satisfy the requirements of continuity and smoothness for transmitting multimedia. The simulation experiment shows that the DAIMD algorithm is more suitable for multimedia transmission than traditional AIMD algorithm.

In addition, DAIMD algorithm also has some shortcomings. DAIMD algorithm is only simulated in the wired network but not validated in wireless network, so the algorithm has some limitations. The next step will be based on the characteristics of wireless networks, in-depth study of the multimedia stream congestion control policy. Later, we will analyze the factors and effects of the multimedia transmission using DAIMD algorithm.

Acknowledgements

This work financially supported by National Natural Science Foundation of China (No. 61370107) and self-determined research funds of CCNU from the colleges' basic research and operation of MOE (No. CCNU14A05018) and co-production and research bases in Hong Shan District, Wuhan, PR. China.

Reference

[1] Guo-qing Liu, AReal-time Streaming Transmission Congestion Control Algorithm Research based on RTCP[D].Sichuan:Sichuan University: 2006.

[2] Mei-ying Dang, Yang Ou, Yuan-shu Sun, Chang-fei Zhen. A New Kind of Streaming MediaCongestion Control Algorithm [J].Journal of Chinese ComputerSystems,2011,32(8):1554-1555.

[3] Shang-bing Chen,Xiao-yanHe,Ji-xinQian.Packet Congestion Control Protocol (DCCP) Study [J]. Journal of computer science.2003, 30(5): 142-144.

[4] Qing-sheng Wang, Xin-fang Yang, Qing-wei Wang.An Improved TCP Congestion Control AIMD Algorithm [J]. Journal of network and communication, 2009, 25 (10): 106-108.

[5] Xiao-yan Zhao, Hui-zhi Zhang, Wen-tao Mao.TCP-like Streaming Media Congestion Control Algorithm [J]. Computer engineering and design, 2014, 35 (3): 776-778.

[6] AndrewsTanenbaum. Computer Networks [M].4. Beijing: Tsinghua University press, 2003:547-555.

[7] Bo Wu,Xin-haoChen, Hai-hua Liu. A Mpeg-4 Video Transmission and Evaluation System Based On TFRC[J]. Modern scientific instruments, 2010, 4: 18-20.

[8] Ke-pei Chang, Shao-zi Li.An Improved Congestion Control Algorithm Based on Feedback[J]. Journal of computer applications. 2007, 27 (10): 2418-2419.

[9] Qing-sheng Wang, Xin-fang Yang,Qing-wei Wang.An Improved TCP Congestion Control AIMD Algorithm [J].Journal of network and communication, 2009, 25 (10): 106-108.

[10] Lai YC.Taxonomy and Evaluation of TCP-friendly Congestion control Schemes on Fairness, Aggressiveness and Responsiveness. IEEE Network,2007,21(6):6-15.

[11] Da-lu Zhang,Xiao-qing Zhu,Zhi-guo Hu, Jun-sheng Zhang.Packet Loss on the Quality of theVideo Experience Analysis [J]. Journal of Environmental Sciences 2010 46 (1): 71-73.

[12] Handleym, PadhyeJ. RFC3448, TCP friendly rate control (TFRC): Protocol specification [S-/OL]. [2003-01-01]. URL:http://www.iet.forg/rfc/rfc3448.txt.

[13] Janani M, Reddy PC. TFRC for Congestion Control in Real Time Applications[J]. International Journal of Networks and Systems. 2013, 2(6): 45-52.

[14] Vardhan SV, Reddy PC. Congestion Control in Real Time Application [J]. International Journal of Computer Applications, 2012, 51(8): 31-37.