the design of hand and box seedcase cutter

XIAO Yan Huang[1, a *] Bo Liu[2,b] and Yue Wang[3,c]

[1] The Engineering Department of ZhenJiang Watercraft College, Zhenjiang, Jiangsu, China

[2] Department of mechanical engineering of ZhenJiang College, Zhenjiang, Jiangsu,China

[3] The Engineering Department of ZhenJiang Watercraft College, Zhenjiang, Jiangsu, China

[a]hxylyd@163.com, [b]zjgzliubo@163.com, [C]wangyue1982@163.com

Keywords: seedcase cutter, box style,design.

Abstract. Based upon existing instruments have some disadvantages in both ways, one hand is simple structure, single function ,not work, difficult to cut, cannot cut completely or unsafe issues;on the other hand is complex structure, equipped with gear-down mechanism ,high manufacturing cost, bad price/ performance ratio, the author design a hand &box seedcase cutter.This cutter not only has a simple structure, but also has better features such as high price/performance ratio, easy to cut , safe, the skin can be peeled off quickly.

Introduction

While eating fruits such as apple, pear, seedcase usually have to be cut off.In order to cut off the skin of fruits, many easy-use cutter are invented besides small knife and little by little, an instrument take instead of knife held by hand, which can fix fruit and then cut skin.But existing instruments have some disadvantages in both ways, one hand is simple structure, single function ,not work, difficult to cut, cannot cut completely or unsafe issues；on the other hand is complex structure, equipped with gear-down mechanism ,high manufacturing cost, bad price/ performance ratio.In order to overcome these disadvantages mentioned above, the author design a hand &box seedcase cutter.This cutter not only has a simple structure, but also has better features such as high price/performance ratio, easy to cut , safe, skin can be peeled off quickly.

Structure design

The structure of hand &box seedcase cutter is shown as figure 1.figure2 is A-A view in figure1,figure3 is magnify view to part in figure1,figure4 is B-B view in figure1.The new cutter is equipped with cask box,cask box is consist of lowe /upper cases assembled with guide channels on end plane. The cross section of guide channel is V shape for upper case 16 and lowercase 2.Rotatable gear ring 6 of taper cutting rack is located in guide channel of upper case16； supporting base 1 is installed onto the bottom of lower case 2,there are concentric holes on the center location of left/right walls of lowercase2,locating bolt 5 is installed onto a screw hole,the end of bolt 5 connect movableball4with claw3,the other hole is fixed by crank shaft 13,one end of crank shaft 13 is connected to locating claw15,the other end is connected accordingly by both taper gear 12 and crank 14； rotatable claw3 and locating claw15 are respectively made up of main fingers and assist fingers,main finger is taper and assist finger is recess-round,main finger is secured onto the recess location of assist finger .finger's material is stainless steel or coated carbon steel.Crank shaft13can take advantage of the hole of driven system housing 12 as a supporting hole； tapergear 12gear ring 6 mesh with each other； gear ring 6 has protruding cylinder ring and cutting rackconnector7 on its fillet face； there is a screw hold on gear ring and rackconnector7,hole is secured by bolt 8,the end of bolt 8 is connected to blade 10 via screw 9,the shape of blade10 is fan,the cutting edge is arc,blade's material is stainless steel.The distance between both axes of Locating bolt5 and bolt 8 is larger than15mm.

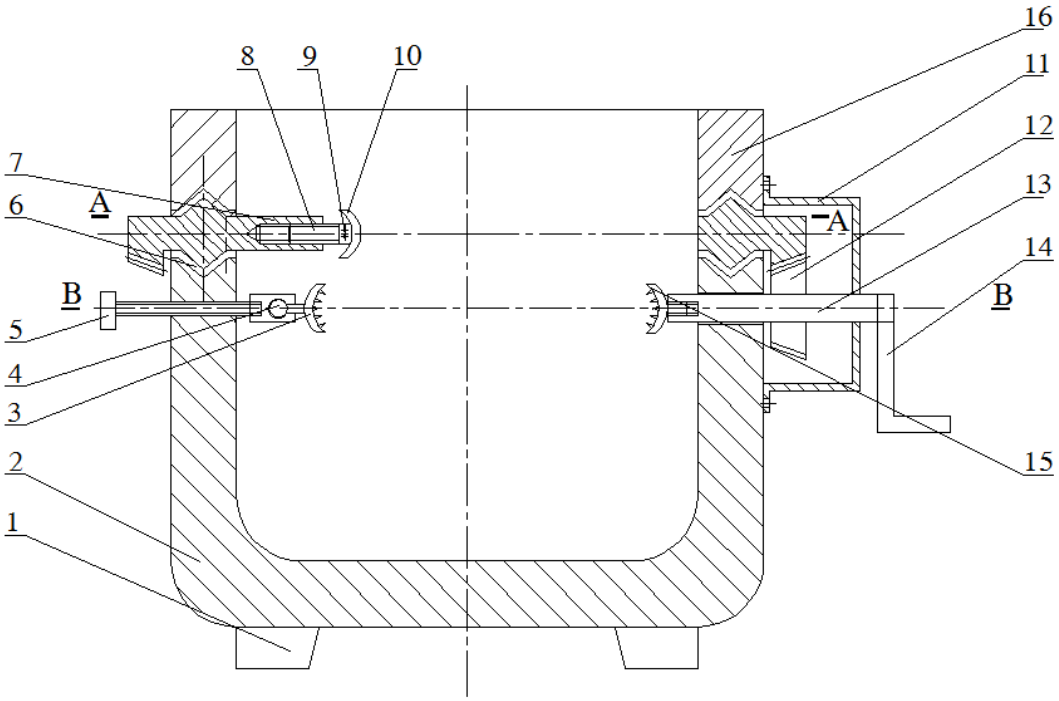

Figure1 structure graphic drawing of hand &box seedcase cutter

1-Figure4 supporting base 2-lower case 3-rotatable claw 4-movable ball 5-locating bolt 6-rotatable gear ring of taper cutting rack 7-connector of gear ring to cutting rack

8-bolt 9- screw 10-blade 11-gear-driven housing 12-taper gear 13-crank shaft 14-crank 15-locating claw 16-upper case

working principle and operational method

working principle

New cutter adopt the principle of mechanical drive,divide the force into2 portion: one is to drive fruit ‘s cutting rack to rotate,the other is to drive gear system, then drive gear ring to run horizontally per 360 degree. Two mechanism will become 2 main parts that have relative rotation,rotatable locating rack drive fruit to turn, ready for being cut,gear ring has a 360 degree rotation horizontally, drive cutting rack, then blade to move in circle,so blade tip can move in order to cut off the skin.

operational method

When cutting fruit(apple, pear),2 hollowness are aligned with both locating claw15 and rotating claw3 3,then turn bolt5 to lock fruit,blade 10 is set to start location ,blade is connected onto bolt8,blade tip is pressed/sliced tightly into the surface of fruit turn crank14,fruit is rotating,blade10 move as an arc motion around the box.Skin can be peeled off because of relative motion between fruit and blade.When fruit is rotating for one cycle, blade 10 turn a length of ARC,skin can be cut one round.Continuously shake crank 14, skin can be cut round by round till completion .

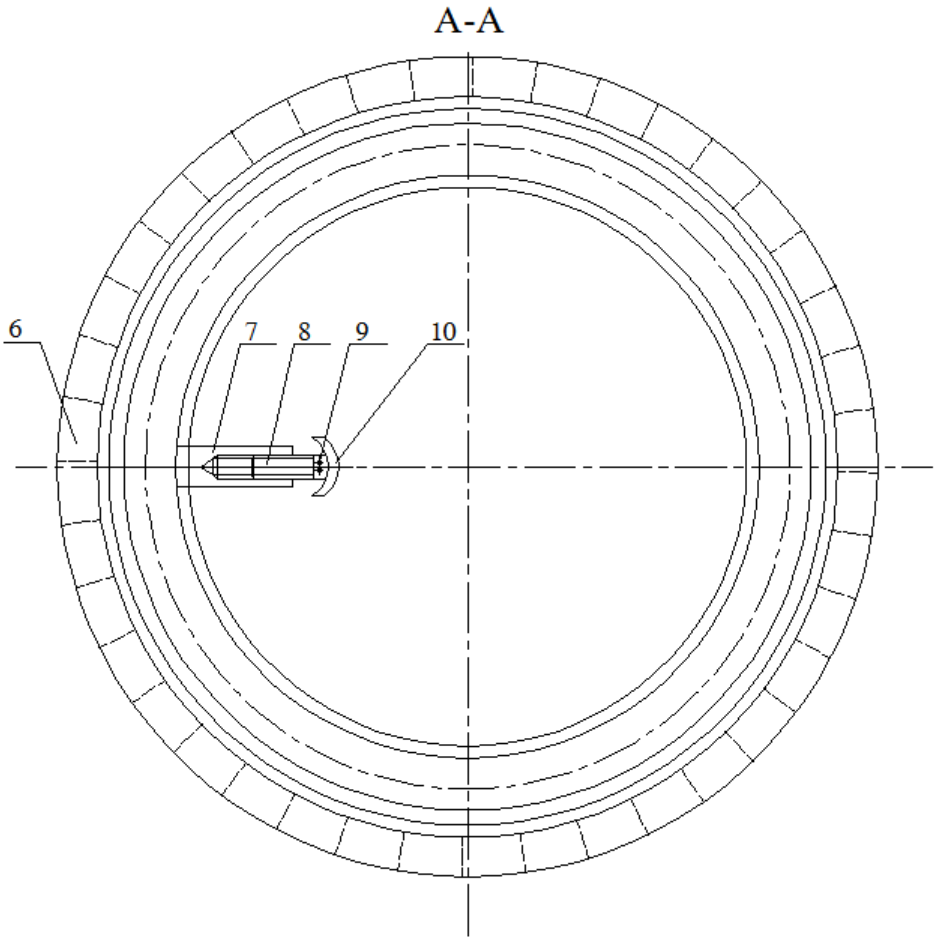

Figure2 structure graphic drawing of hand &box seedcase cutter A-A view
6-rotatable gear ring of taper cutting rack 7-connector of gear ring to cutting rack
8-bolt 9- screw 10-blade

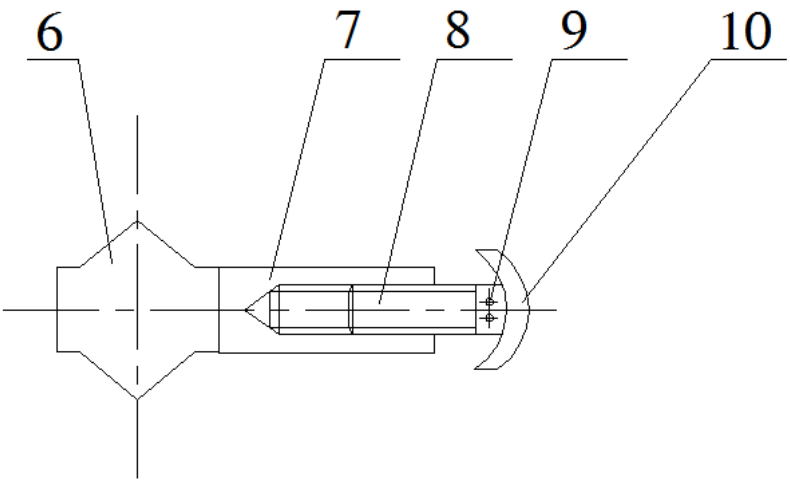

Figure3 structure graphic drawing of hand &box seedcase cutter magnify view
6-rotatable gear ring of taper cutting rack 7-connector of gear ring to cutting rack
8-bolt 9- screw 10-blade

Technical benefits

As compared to traditional technology, hand &box seedcase cutter has following advantages and good effects：

(1)both adjustable rotating claw3 and locating claw15 are centered in one line , so both claws can hold different fruits of small or big , which lead to wide use.

(2)because there is relative motion between fruit's rotation and blade 's ARC movement,blade can move along fruit surface per its curvity,skin can be cut even in thickness and width. Cutting is done continuously , the speed is higher.

(3)this new cutter has some advantages such as simple structure , easy operation, safe, convenient carry, low malfunction, economical , high price/performance ratio and high cutting efficiency.

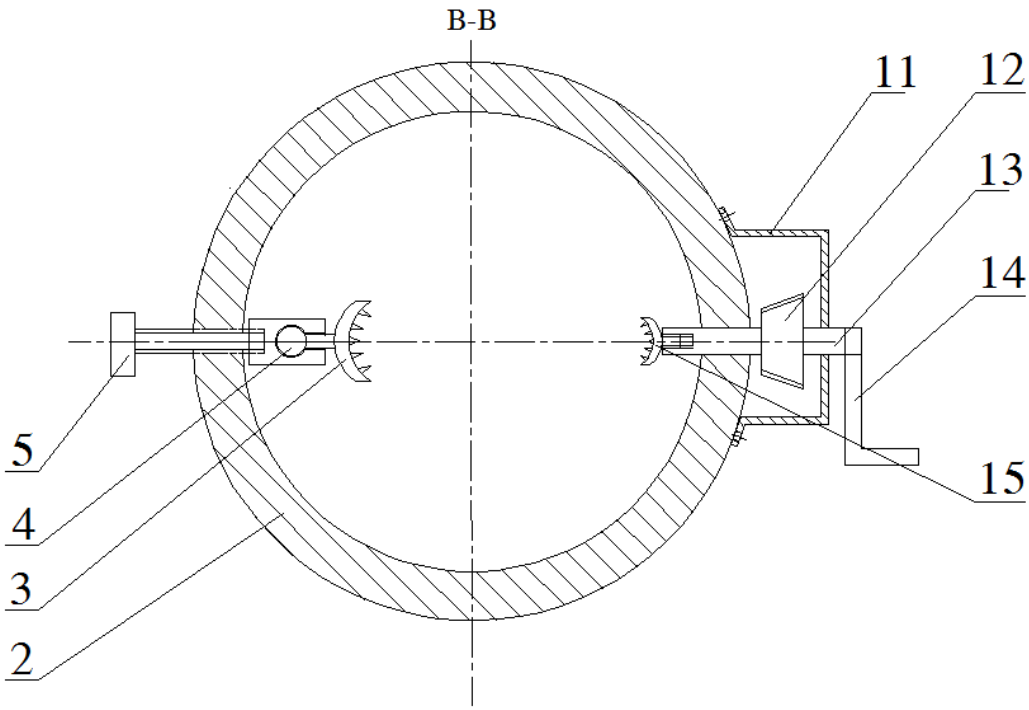

Figure4 structure graphic drawing of hand &box seedcase cutter B-B section view
2-lower case 3-rotatable claw 4-movable ball 5-locating bolt 11-gear-driven housing 12-taper gear 13-crank shaft 14-crank 15-locating claw

Summary

As living level is higher, more and more fruits come into our daily life,it is not only a good habit to cut off the skin of fruits, but also an effective way to prevent residual pesticide inside the skin to harm our body.After the devotion to study existing cutting instrument ,the author design a hand &box seedcase cutter to improve these disadvantages mentioned above this new cutter is not only economical and high productivity ,but also easy operation, safety ,simply structure and safer

References

[1] yang kezhen. The basis of mechanical design［M］beijing：advanced education press,2013
[2] tanghong kai. The design of fruit parer［J］mechanical enginer.2013(3):3-6