The Structural Design of the Barrier Gate and the Modal Analysis of its Box Body

Changbo Zhang[1,a],Li Fu[2,b*],Xiantong Song[3,c],Ma Xu[4,d]

[1, 2,3]School of Materials Science & Engineering, Tianjin University of Technology, Tianjin 300384, China

[4] Tianjin Enterprise Key Laboratory of Cooper Wires for Electrical Purposes, Tianjin 300402, China

[a]853728434@qq.com, [b]catjxd@126.com, [c]478747390@qq.com, [d]maxumax@163.com

Keywords: Barrier gate, Structural design, Modal analysis.

Abstract: Barrier gate is to achieve the efficient management of cars in and out of the entrance. In this paper, we design the crank-rocker mechanism and the whole structure of the barrier gate. In order to avoid the resonance of the box body and motor exciting vibration frequency, the modal analysis is carried out.

Introduction

In recent years, with the sustained and stable development of China's economy, automobile industry is fast growing. At the same time, people began to pursue higher quality of life, the number of private cars is increasing. Car has bring convenience to people’s travel, at the same time, in large and medium-sized cities, cars cause road congestion, the problem of vehicle management is becoming more and more serious.

In order to improve the management level of the vehicle in and out of the entrance, barrier gate becomes an indispensable tool, barrier gate also is known as a car stopper, widely used in school, living quarters, factories, highways, parking and other public places. Barrier gate can be divided into straight - bar, crank arms and fence type.

Structural Design of the Barrier Gate

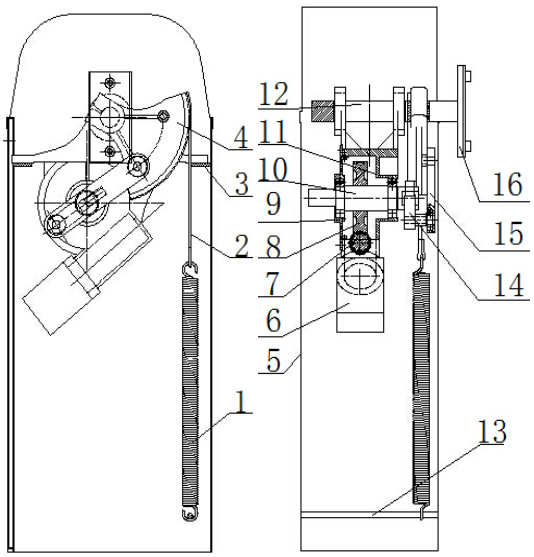

Figure 1 Barrier gate structure

1. Spring 2.Wire rope 3.Fixed plate 4.Rocker arm 5.Box body 6.Electric machinery 7.Worm 8.Worm wheel 9.End cover 10.Power shaft 11.Casting shell 12.Transmission shaft 13.Spring fixed rod 14.Crank arm 15.Connecting rod 16.Rod splint

The structure of the barrier gate as shown in Figure 1, the deceleration device consists of 7 worm and 8 worm wheel; the transmission device comprises 14 crank arm, 15 connecting rod, 4 rocker arm , 12 transmission shaft, and 10 power shaft; and powered by the motor 6.

Working process of the barrier gate: Powered by the motor 6, through 7 worm and 8 worm wheel reducer to drive the power shaft 10, 14 crank arm with the power shaft 10 rotates, the crank arm for 360° rotation, at the same time, through the connecting rod 15 transmits the power to the rocker arm 4, rocker arm in the 90° angle swing, the transmission shaft 12 with the rocker arm 4 do 90 ° reciprocating rotation pendulum movement, the rod that fixed on the rod splint 16 also do 90 ° reciprocating rotation pendulum movement, achieving to control of the rod.

Modal Analysis of the Box Body

Principle of Modal Analysis. The equilibrium equation of the structural dynamic problem analysis is,

$$[M]\{x''\}+[C]\{x'\}+[K]\{x\}=\{F(t)\} \tag{1}$$

$[M]$ is the mass matrix, $[C]$ is the damping matrix, $[K]$ is the stiffness matrix, $\{x\}$ is the displacement matrix, $\{F(t)\}$ is the force vector, $\{x'\}$ is the velocity vector, $\{x''\}$ is the acceleration vector.

Dynamics analysis, modal analysis is the most basic of other dynamics analysis. Modal analysis can help designers to determine the natural frequency and vibration mode of the structure, so that the structural design to avoid the resonance, and guide the engineers to predict the form of vibration of the structure under different loads.

The model analysis is a classical eigenvalue problem, and the dynamic equation is,

$$[M]\{x''\}+[K]\{x\}=\{0\} \tag{2}$$

The free vibration of structure is simple harmonic vibration, the displacement for the sine function,

$$x = x\sin(wt) \tag{3}$$

Substituting (3) to (2) to obtain,

$$([K]-w^2[M])\{x\}=\{0\} \tag{4}$$

Equation (4) as the classical eigenvalue problems, the equation of the characteristic value is w_i^2, the square root of w_i^2 is natural circular frequency and natural frequency of vibration is $f=\frac{w_i}{2\pi}$.

The characteristic vector $\{x\}_i$ corresponding to the characteristic value w_i is the mode of vibration of the natural frequency of vibration $f=\frac{w_i}{2\pi}$.

Modal Analysis of the Box Body.(1)Establishment of the Geometric Model

The establishment of the box body in three-dimensional geometry software, and then by UG software and ANSYS workbench software seamless link, importing the 3D model into the finite element analysis software ANSYS workbench, to make full use of the advantage of the software. Complete the creation of Project A, as shown in Figure 2. Then establish the modal analysis project B, and the project A geometric model data and project B share, as shown in figure 3.

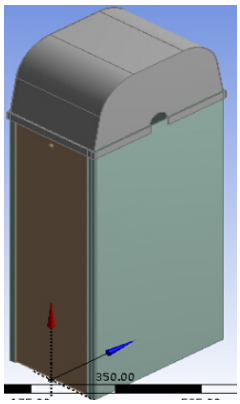

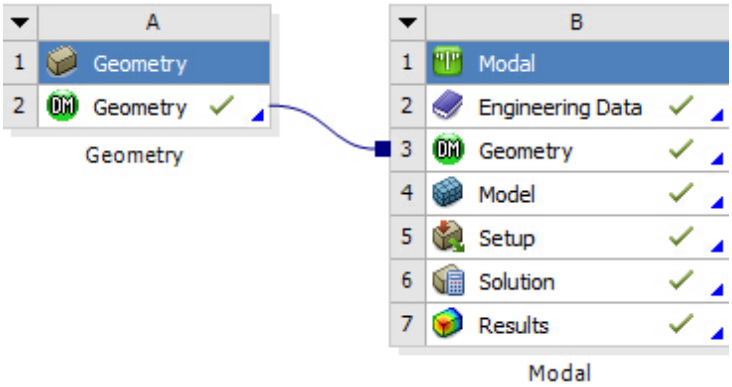

Figure 2 box body geometry model

Fig. 3 the establishment of modal analysis project

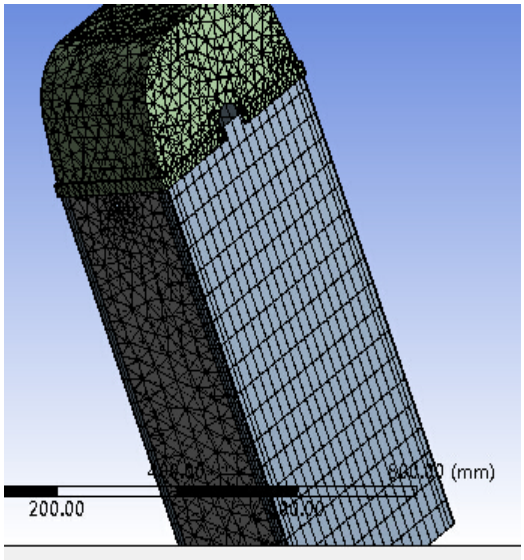

Figure 4 the finite element model after meshing

The box body is made of cold rolled steel sheet, material selection Q235, the elastic modulus E is 200Gpa, Poisson's ratio is 0.3 V, the density is 7.85g / cm^3.

(2)Meshing

ANSYS Workbench has two mesh platform, one is integrated in the workbench platform, highly automated meshing tool-meshing platform, and the other is the senior professional and geometry meshing tool ICEM CFD. Workbench can automatically generate the mesh and save time for large complex mesh. In the process of automatic mesh generation, for high precision area will automatically adjust mesh density, the shape and characteristics of the mesh generation are good, and the high quality of the mesh is ensured. The minimum length of the box is 1.5mm, 26755 nodes, 9200 units, as shown in Figure 4.

(3)Impose Supports

Simulating the real constraint state of the structure, will be able to get the vibration modes of structure actual constraint condition, increased the accuracy and reliability of the simulation results. We set the bottom of the box body to a fixed constraint. As shown in figure 5.

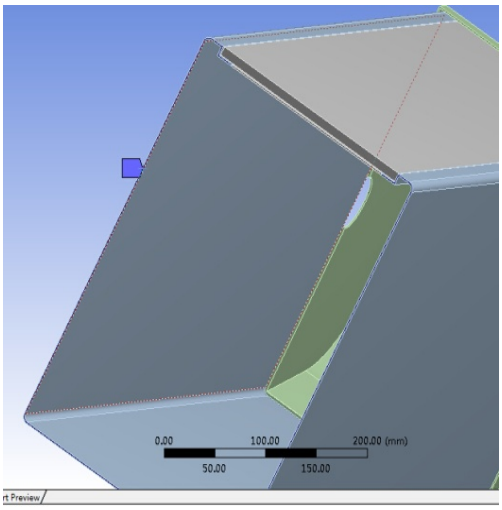

Figure 5 impose constraints

(4)Analysis of the Results of the Modal Analysis

Modal analysis, which is to determine the vibration characteristics of the structure or mechanical parts, get the natural frequency and vibration mode of the structure, resulting in the design stage to eliminate vibration failure may occur, to make the design of the structure to avoid resonance. The natural frequency of the box is shown in Figure 6, the first six mode vibration mode as shown in Figure 7.

	Mode	Frequency [Hz]
1	1.	45.936
2	2.	53.116
3	3.	68.679
4	4.	72.037
5	5.	93.776
6	6.	99.988

Figure 6 natural frequency results

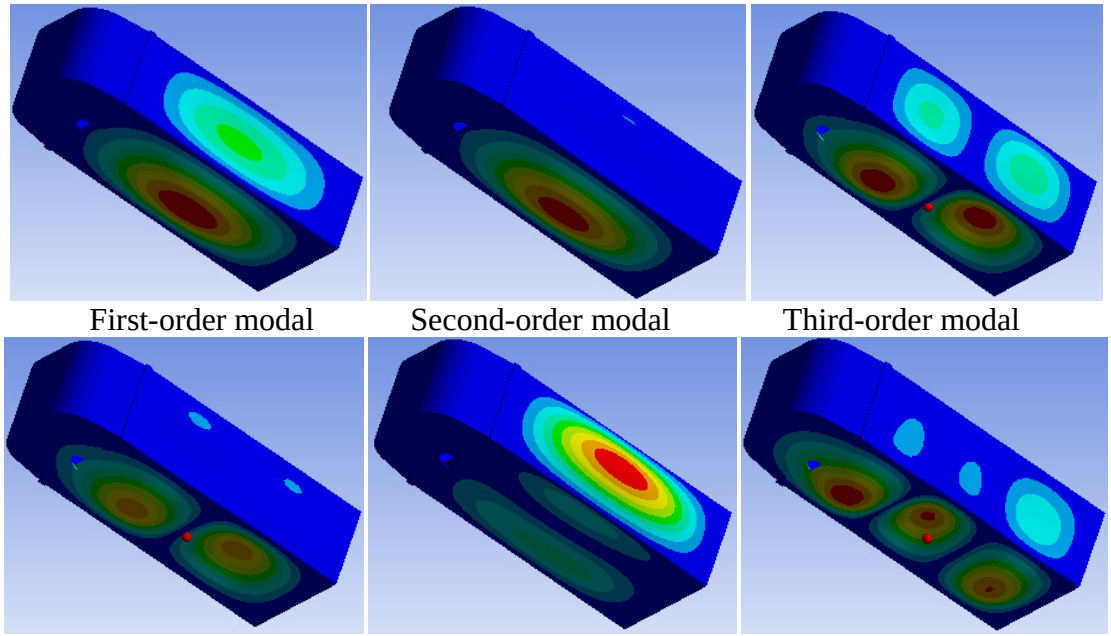

First-order modal Second-order modal Third-order modal

Forth-order modal Fifth-order modal Sixth-order modal

Figure 7 the first six mode vibration mode

The main motivation of the box body is the motor, the motor speed is 1500r/min, the rotation frequency of the motor is 25Hz. By analyzing the first six box body order vibration frequency (45.9 ~ 99.9) Hz, we can see the box body stagger the main excitation frequency, avoiding resonances occur.

Summary

Barrier gate using crank-rocker mechanism, which can keep the rocker has been doing 90 ° reciprocating motion, and doesn't appear excessive brake lever swing. Barrier gate overall structure is simple, easy to manufacture, reduces the production cost of the factory.

In the analysis of the whole design process, combined with the actual, focus on practical, reliable and effective principle, using UG to the barrier gate of 3D design and modeling, and then use ANSYS Workbench for the barrier box body modal analysis, get the natural frequency and mode of vibration of the box body, to avoid or reduce the incentive for these frequencies, and the further improvement of the barrier gate.

Acknowledgements

This work was supported by Tianjin Natural Science Foundation（No. （15JCZDJC38700））

References

[1] H Sun, ZM Chen, WJ Ge. Mechanical principle [M]. Higher education press, 2006, (5).

[2] C Li. Introduction to the design of the control system of the automobile in and out [J]. Journal of Wuxi Nanyang Vocational College, 2013, (6) .51-53.

[3] B Huang. The application of the digital barrier gate in the parking management system [J]. Chinese security. 2014.

[4] ZX Huang, CZ Liu. ANSYS Workbench14.0 super learning manual [M]. Posts @ Telecom Press.

[5] B Li, ZJ He, XF Chen .ANSYS Workbench design, simulation and optimization [M]. Tsinghua University Press.

[6] YP Yu, Design and implementation of the control system of the barrier gate based on PLC [J]. Shandong industrial technology.2013.