Research On A Kind Of Improved Integral Adaptive Control Method With Zero Final Value

Guoqiang Liang[1,a], Guangbin Wu[2] , Junwei Lei[2, b]

[1]Department of Training, Naval aeronautical and astronautical University, Yantai, China

[2]Department of control engineering, Naval aeronautical and astronautical University, Yantai, China

[a]liangguoqiang1024@126.com, [b]leijunwei@126.com

Keywords: adaptive control, parameter identification, one order system, final value, stability

Abstract. In order to achieve adaptive control and single parameter identification of one order system, an ordinary adaptive control method is used in this paper. By improving integral control, the system parameter can be identified. In the end, a conclusion can be made that theoretical analysis is correct and parameter identification method is effective by numerical simulation.

Introduction

Zero final value is a special kind of adaptive method[1-9] that seldom is discussed. As the demand for control performance increases, the problem of time-variance parameters of controlled system is more and more important. A lot of parameter identification method is proposed by specialists and representatives from China and abroad. The classical parameter identification method is least square method[1], Kalman filtering method, adaptive. The method modern parameter identification method is neural network method[2], genetic algorithm method[3] and particle swarm optimization. But calculating amount of these method is large, instantaneity and astringency can't meet the demands of the control system. In this paper, an improved integral adaptive control is proposed, the simulation results show that system parameters can be identified.

Problem Description

One order system can be written as：

$$\dot{x} = ax + u \tag{1}$$

where a is unknown constant parameter, the goal is designing a controller such that the system state x can trace the expected value x^d .

Design Improved Integral Adaptive Identification Controller

An ordinary adaptive control method is used as follows, define a error variable as $z_1 = x_1 - x_1^d$, then

$$\dot{z}_1 = \dot{x}_1 - \dot{x}_1^d = ax + u \tag{2}$$

Design state feedback control law as:

$$u = -\hat{a}x - \sum_{i=1}^{n} k_i f_i(z_1) - k_{s1}\int z_1 dt \tag{3}$$

choose $n = 1$, $k_i > 0$, $f_1(z_1) = z_1$. design regulating law:

$$\dot{\hat{a}} = \Gamma_a z_1 x \tag{4}$$

define $z_2 = \int z_1 dt$, $\tilde{a} = a - \hat{a}$, then

$$\begin{aligned}\dot{z}_1 &= \tilde{a}x - k_{s_1} z_2 - k_1 z_1 \\ \dot{z}_2 &= z_1 \\ \dot{\tilde{a}} &= -\Gamma_a z_1 x\end{aligned} \tag{5}$$

choose Lyapunov function:

$$V = \frac{1}{2} z_1^2 + \frac{k_{s1}}{2} z_2^2 + \frac{1}{2\Gamma_a} \tilde{a}^2 \tag{6}$$

Then:

$$\dot{V} = \tilde{a}xz_1 - k_1 z_1^2 - k_{s_1} z_2 z_1 + k_{s1} z_2 z_1 + \frac{1}{\Gamma_a} \tilde{a}\dot{\tilde{a}} = -k_1 z_1^2 \le 0 \tag{7}$$

The system is stable, and there is $z_1 \to 0$, but it can't make sure that system parameters can be identified.

The above model can be written as:

$$\begin{bmatrix} \dot{z}_1 \\ \dot{z}_2 \\ \dot{\tilde{\alpha}} \end{bmatrix} = \begin{bmatrix} -k_1 & -k_{s_1} & x \\ 1 & 0 & 0 \\ -\Gamma_a x & 0 & 0 \end{bmatrix} \begin{bmatrix} z_1 \\ z_2 \\ \tilde{\alpha} \end{bmatrix} \tag{8}$$

Obviously, system can make sure all state identified. Define:

$$\dot{z}_2 = z_1 - k_2 z_2 \tag{9}$$

Then:

$$\begin{bmatrix} \dot{z}_1 \\ \dot{z}_2 \\ \dot{\tilde{\alpha}} \end{bmatrix} = \begin{bmatrix} -k_1 & -k_{s_1} & x \\ 1 & -k_2 & 0 \\ -\Gamma_a x & 0 & 0 \end{bmatrix} \begin{bmatrix} z_1 \\ z_2 \\ \tilde{\alpha} \end{bmatrix} \tag{10}$$

There is $z_1 \to 0, z_2 \to 0$, then

$$\dot{z}_1 = \tilde{a}x - k_{s_1} z_2 - k_1 z_1 = \tilde{a}x = 0 \tag{11}$$

When $x \ne 0$, unknown system parameters can be identified. That is $\tilde{a} = 0$.

Obviously, the improved integral adaptive identification controller can ensure the system parameters be identified.

Numerical Simulation

Choose unknown parameter $a = 3$, initial state $x_1(0) = -1$, expected state $x_1^d = 1$, use Simulink in Matlab, write program without improved integral adaptive identification controller, the program can be written as:

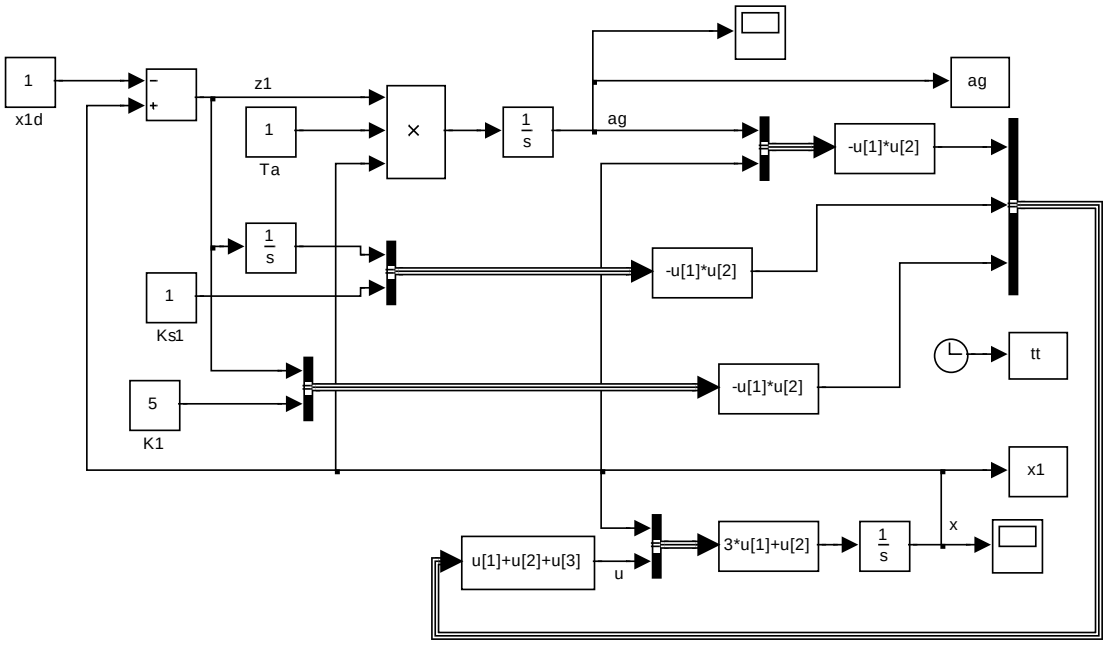

Fig.1 Program without improved integral

Choose $k_1 = 5, k_{s1} = \Gamma_a = 1$, the simulation results are as follows:

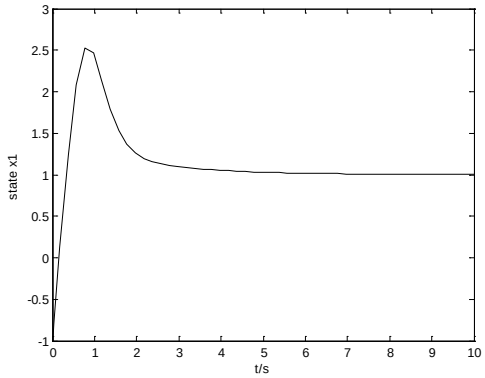

Fig.2 state a

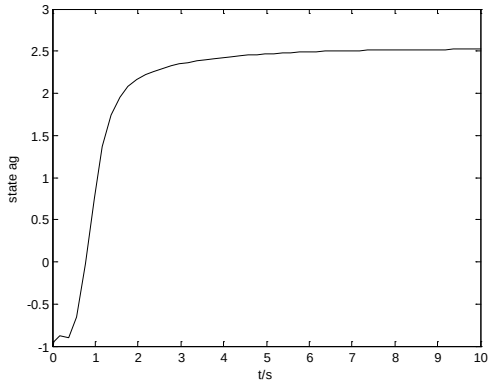

Fig.3 state x1

From the result, the error can converge to zero, but unknown parameter can not be identified. When the system use improved integral control, the program can be written as:

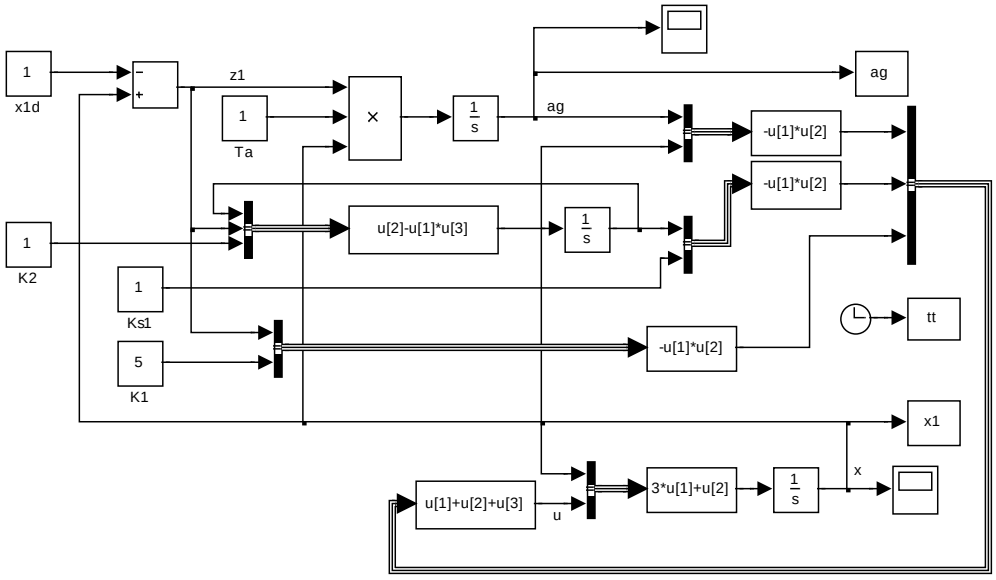

Fig.4 Program with improved integral

Choose $k_2 = 1$, the simulation results are as follows:

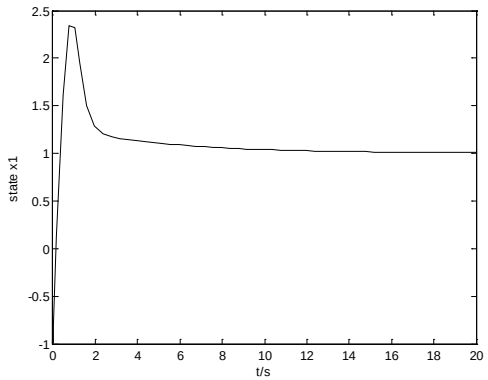

Fig.5 state a

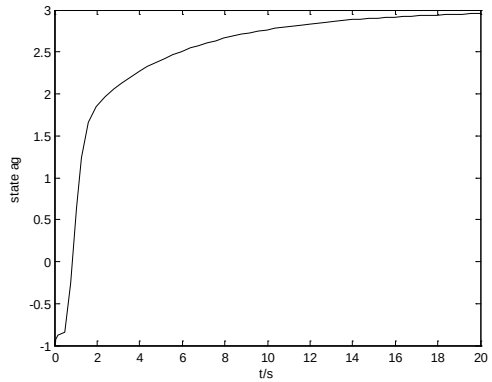

Fig.6 state x1

The unknown parameter can be identified. If the system don't use integral control, that is $k_{s1} = 0$, the simulation results are as follows:

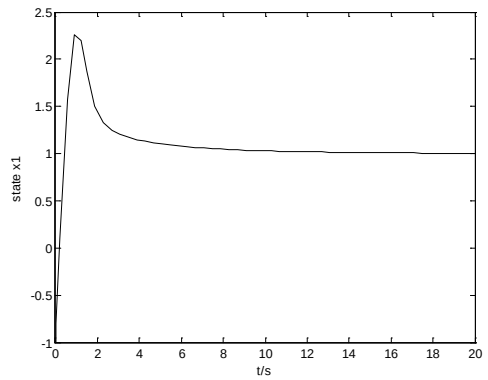

Fig.7 state a

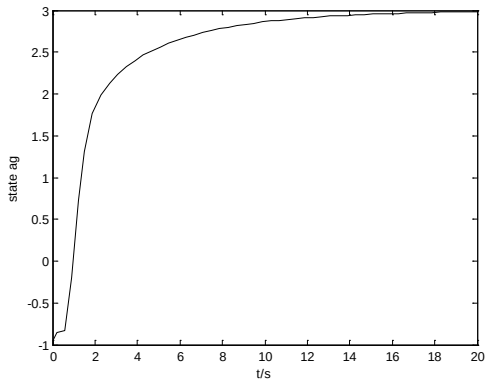

Fig.8 state x1

When $k_{s1} = 1$, $k_2 = 0.1$, the simulation results is dotted line. When $k_{s1} = 0$, the simulation results is full line.

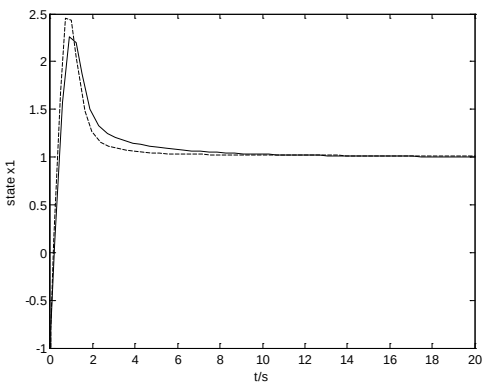

Fig.9 state a

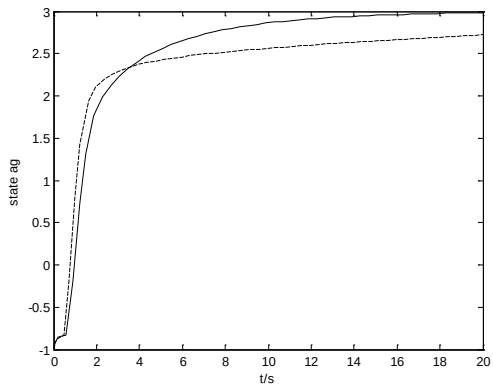

Fig.10 state x1

The simulation results show that the identification speed of improved integral control is lower than no-integral control.

Conclusion

According to the problem that system parameter need to be identified, an improved integral adaptive control is proposed in this paper. By analysing theory and the simulation results, we can make a conclusion that the improved method is effective to parameter identification. Due to integral terms, the identification speed of improved integral control is lower than no-integral control.

Reference

[1] Maurizio C, Marcello P, Giansalvo, et al. A new experimental application of least-squares techniques for the estimation of the induction motor parameters[J]. IEEE Transactions on Industry Applications, 2003, 39(5):1247-1256.

[2] Raj M B, Alexander G P, Hamid A T, Neural speed filtering for sensorless induction motor drives[J]. Control Engineering Practice, 2004, 12(6): 687-706.

[3] Huang K S, Kent W, Wu Q, et al. Parameter identification of an induction machine using genetic algorithms[C] // Proceedings of the 1999 IEEE International Symposium on Computer Aided Control System Design. [S. L.]: [s. N.],1999: 510-515.

[4] Huynh D C, Dunnugan M W. Parameter estimation of an induction machine using advanced particle swarm optimisation algorithms[J]. IET Electric Power Applications, 2010, 4(9): 748-760.

[5] Azinheira J R, Moutinho A, Paiva E C. A backstepping controller for path-tracking of an underactuated autonomous aitship.[J] International Journal of Robust and Nonlinear Control, 2009, 19(4):418-441

[6] Benjovengo F P, Paiva E C. Sliding mode control approaches for an autonomous unmanned airship. AIAA 2009-2869, 2009

[7] Park, C.S., H.Lee, M.J.Tahk, et al. Airship control using neural network augmented model inversion[J]. IEEE Conference on Control Applications. 2003

[8] Xie, S.R., J.Luo, J.J.Rao, et al. Computer Vision-based Navigation and Predefined Track Following Control of a Small Robotic Ariship. 2007.33(3):286-291.

[9] Rao, J., Z.Gong, J.Luo, et al., Robotics airship mission path-following control based on ANN and human operator’s skill. 2007.29:5-15.