Constructing of Filter Part in Liquid Electrostatic Experimental Equipment

Teng Xu, Hua Xie[a], Guowei Zhao

School of Safety Engineering, Shenyang Aerospace University, Shenyang 110136, China

[a]email: tedalanchong@163.com

Keywords: Filter, Electrostatics, Designing and building.

Abstract. During the transmission and application of refined petroleum products, electrostatic accidents often happen. When speed of electrostatic accumulation is faster than speed of electrostatic dissipation, and this can cause electrostatic accumulation in petroleum. Static test is needed in order to grasp the law of electrostatic electrification and determine the risk of electrostatic discharge. Static test is not only an integral part of electrostatic protection engineering, but also the basis of electrostatic protective design and management. The liquid electrostatic filter in the test device was designed, which to produce more of the electrostatic charge, according to the requirement of the static test.

Introduction

Liquid can generate static electricity when it is in the flow, mixing, sedimentation, filtration, shaking, jet, splash, washed, such as filling process [1-4]. It is a potential danger that static electricity of flammable liquids and flammable liquid possible explosion, fire, these liquid such as oil products such as gasoline, diesel, aviation kerosene in fuel oil and benzene, xylene and other chemical raw materials. It is a very important work to study liquid electrostatic for safety production [5-8].

It is produced when the liquid flow in the pipeline of electrostatic [9,10]. First, the charge layer is generated in the liquid and tube wall interface. It is a very thin layer of charge of the solid wall surface adsorption, the thickness of only a few molecular sizes. This is known as a fixed charge layer. Yet it is thicker in charge within the liquid layer, there are even a few millimeters thickness, this is called diffusion layer charge. Second, Charge in the coupling charge layer detached because the flow of fluid, The flow of fluid in the impulse force charge that within the diffusion layer flow.

On the basis of the fully research of liquid electrostatic discharge types and laws, the liquid electrostatic equipment is designed. The experimental equipment designed is built to the bed stand. In this article, it is the key of the designing of filter in liquid electrostatic experimental equipment

The generation and dissipation of the charge should be fully considered in the process of static test, so it is necessary for us to design the filter in the static test device. The ability of equipment to produce charge should be strengthened when the liquid flow through the filter. Experiment result should be considered diversity when using different material filtration material. In order to prevent electric charge to dissipate and reduce electrostatic leakage, It is also a must adopt methods of insulation.

Designing of Filter Equipment

It is necessary to design a filter to create static electric charges when liquid through the filter. In the filter, filter cell, petal orifice-baffle that clip filter materials, insulation and connection are comprised.

Top of filter cell (Fig. 1) is connected with the oil drum, and bottom of filter cell is connected with three-way pipe. Flange (DN=300) and sheath (DN=300) are comprised between two parts of filter, and holes (Φ=57 mm and Φ=32 mm) in the sheath. Filter is connected with other parts for keeping

circulatory system. Fig.1 show that there is a baffle that can reduce flow rate so that petal orifice-baffle is intact when liquid is through the clip.

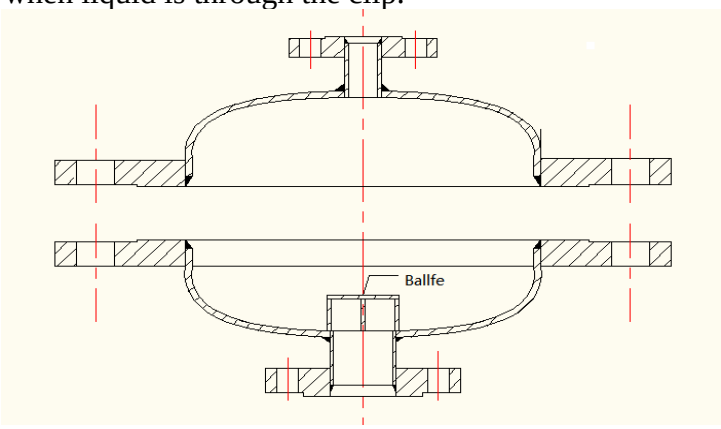

Fig. 1 Stainless steel parts of filter

Petal orifice-baffle is comprised by two parts that can clip filter materials (Fig. 2). Fig.2 show that the left part (Φ=320 mm) is decided by the flange diameter, the right part (Φ=365 mm) is decided by the sealing surface of the flange. Bolt holes (DN=300) are decided by the flange. Two parts are matched, and liquid is flowed via petal orifice-baffle. The distance of adjacent petals is 20mm. Petal orifice-baffle is composed of phenolic cotton paper glass-clothes platet.

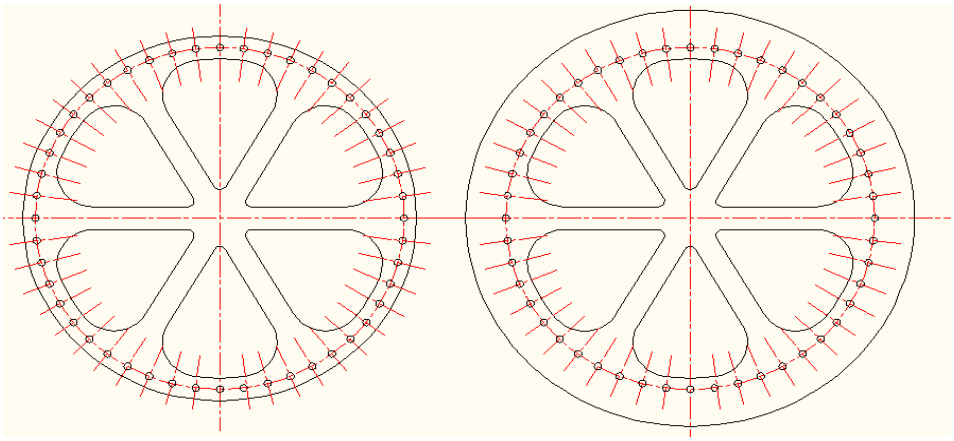

Fig. 2 clamping device

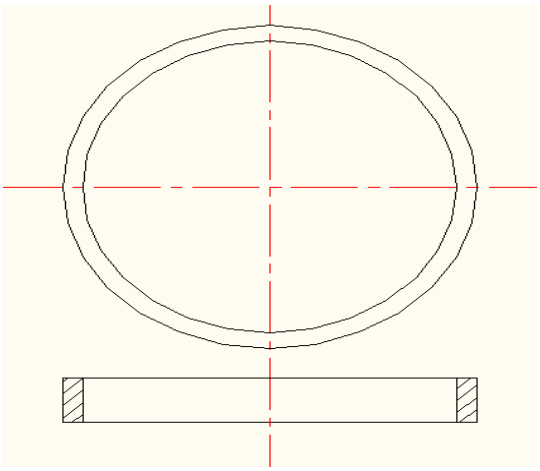

Fig. 3 Insulation circle Ptfe material

The parts of the filter are composed of insulation materials. Static electric charges created are poured into the oil drum (Fig.3).The parts is composed of polytetrafluoroethylene, and size of them are decided by flange (Φ=360 mm, Φ=325 mm, H=50 mm).

Building of Filter Equipment

Polytetrafluoroethylene is secured to the petal orifice-baffle, filter cell is secured to polytetrafluoroethylene via the bolts. Parts of the filter are connected by flanges. It is necessary to use bolt sleeve that is insulated, so that ESD is not created between the flanges and bolts (Fig.4).The bolt sleeve is composed of two parts, size of them is related to materials that is clipped.

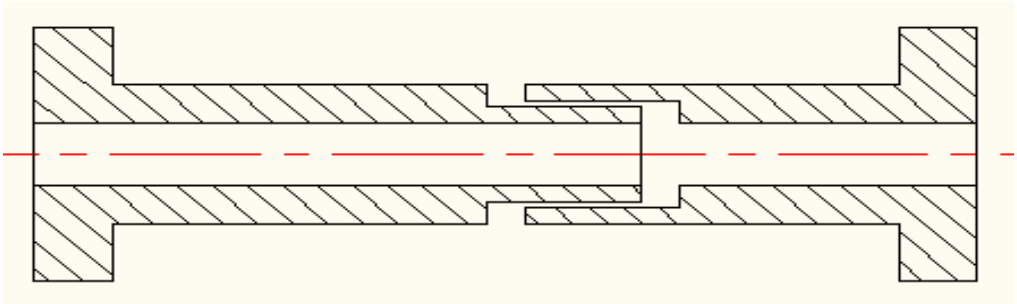

Fig.4 Insulation sleeve

The final test apparatus is shown in Fig. 5.

Fig.5 Filter equipment

Summary

After the assembly and operating equipment, It is reasonable that the design of the filter. Both well-behaved insulation and sealing design are realized. The ability of equipment to produce charge be strengthened when the liquid flow through the filter. Experiment result is considered to be good with using different material filtration material.

Acknowledgements

This work was financially supported by the Undergraduate Innovation and Entrepreneurship Training Program of Liaoning Province (201310143026).

References

[1] J. Gavis, I. Koszman. Development of charge in low conductivity liquids flowing past surfaces [J]. Journal of colloid science, 1961, 16: 375-391

[2] H. Walmsley. The calculation of the electrostatic potentials that occur when tanks are filled with charged liquids [J]. Journal of Electrostatics, 1991, 26(3): 201-226

[3] V. Ebadat. Assessing and controlling electrostatic hazards found in liquid and powder processing. ASSE Professional Development Conference, 2007

[4] U. Pidoll. An overview of standards concerning unwanted electrostatic discharges [J]. Journal of Electrostatics, 2009, 67(2-3): 445-452

[5] R.J. Pazada, T.B. Jones. Effect of surface conduction on charge relaxation in partially filled vessel [j]. Journal of Electrostatics, 1992, 28: 175-185

[6] M. Giles. Electrostatic hazards in liquids and relevance to process chemistry [J]. Organic process research & development, 2003, 7(6): 1048-1050

[7] M. Glor. Electrostatic ignition hazards in the process industry [J]. Journal of Electrostatics, 2005, 63(6-10): 447-453

[8] G. Martin. Hazards and problems associated with liquids [J]. Journal of Electrostatics, 2001, 51-52: 359-365

[9] T.J. Harvey, R.J.K. Wood, G. Denuault, et al. Effect of oil quality on electrostatic charge generation and transport [J]. Journal of Electrostatics, 2002, 55(1): 1-23

[10] J.X. Yang. Influence of injected charge on streaming electrification [J]. IEEE Trans. On Dielectrics Insulating, 1998, 5: 513-517