Study on the Technology of Electric Vehicle

Yingchun Liu

Weifang University of Science & Technology，Shandong, Shouguang, 262700, China.

Keywords: Electric vehicle; Battery pack; Performance; Engine.

Abstract. This paper mainly studies the related technology of electric vehicle. Firstly, it introduces the definition and classification of electric vehicle briefly, then it studies the working principle and the key technology of pure electric vehicles, hybrid vehicles and fuel cell vehicles. Next the electric car battery, battery, motor, speed controller classification and working principle are studied. Finally, it analyzes the necessity of the development of electric vehicles, and summaries the research.

Introduction

All kinds of automobile has become one of the important tools and facilities in human life and production of cultural and recreational activities, as the world car retains the quantity increasing, the car brought environmental pollution, energy shortages, resource depletion and safety problems which have been to human caused great crisis. In order to maintain the sustainable development of the national economy, maintain human living environment and to ensure energy supply, in seeking a solution, govemments and automobile industry realize electric vehicle has good environmental protection performance and fuel with various properties, the research and development of electric vehicles has become the focus of the automotive industry.

Electric vehicle definition classification and electric operation principle

Definition and classification of electric vehicles. Definition of electric vehicles: electric vehicles refer to the vehicle power as the driving force, with the motor drive wheel driving, in accordance with the road traffic, safety regulations of the vehicle.

Electric car auto parts can be divided into three categories: pure electric vehicle hybrid electric vehicle fuel cell car.

The working principle and key technology of electric vehicle. 1) Blade Electric Vehicles

The working principle of the pure electric vehicle is the battery that through the rectifier and the inverter by transformer, secondary side of the transformer according to need to choose a few winding, input voltage to the high frequency alternating current rectifier DC, respectively to the lighting system, measurement system and drive power supply system.

Key technology of pure electric vehicle: fast charge technology, battery technology, motor technology and controller technology, etc..

2) Hybrid electric vehicle

There are at least two of the energy of a vehicle capable of driving are obtained from the vehicle's stored energy. Its principle is as follows: the use of traditional fuel, and at the same time, the motor / engine is to improve the low-speed power output and fuel consumption.

3) Fuel cell vehicle

Taking fuel cell as the power source of the vehicle. The chemical reaction of the fuel cell is not harmful, and the fuel cell car is an ideal vehicle.

The working principle of fuel cell vehicles, so as the hydrogen for the fuel which the fuel cell car is equipped with, with the oxygen in the atmosphere produces chemical reaction, to generate the power motor start, by a motor driven mechanical transmission structure of the vehicle, and drive the car front and rear cardan shaft, rear axle, mechanical structure, rotating wheel drive car.

Electric car battery

Classification of electric vehicle battery. Although due to a variety of chemical power sources, being widely used, large differences in the shape, classification method is difficult to unity, but habit according to the nature of the work and storage of different, generally can be divided into four categories: a battery, secondary battery reserve batteries and fuel cells.

Battery performance parameters. 1) Electric potential: the electromotive force of the battery, or the standard voltage or theoretical voltage of the battery, which is the potential difference between the positive and negative electrodes when the battery is open.

2) Internal resistance

The battery's internal resistance: resistance of positive and negative electrode plates, electrolyte resistance, partition resistance and connector resistance etc..

Positive and negative plate resistance: the commonly used lead-acid battery positive and negative plate are coated with a paste type, from lead antimony alloy or lead calcium alloy plate grid frame and active materials. Therefore, the plate resistance is composed of the grid resistance and the active material resistance.

3) Capacity

The capacity of the battery unit for Cullen (C) or (Ah) ah. There are three distinct terms for the characteristics of battery capacity, theoretical capacity, rated capacity, actual capacity.

Battery pack. Electric vehicle battery pack is comprised of multiple batteries in series. A typical battery pack has about 96 batteries, which are charge to the lithium-ion battery of 4.2V, such a battery pack can produce more than 400V voltage in total. An important consideration in the battery pack monitoring system is the communication interface. Another option is the controller area network (CAN) bus, which is commonly used in automotive applications.

Electric motor

Classification and requirements for motors. Motor classification

In addition to the power generation function, the electric motor of the motor is mainly from the motor, so the motor is used in classification: (simply classified. As in Table 1)

Table 1 Classification of motor

Division According to work in principle	1.DC motor 2.Alternating current dynamo
By structure partition	1.Brushless DC motor 2.Brushless DC motor
Permanent magnet DC motor by material division	1.Rare earth permanent magnet DC motor 2.Ferrite permanent magnet motor 3.Aluminium nickel cobalt permanent magnet motor
By application	1.Driven motor 2.Control motor
Press running speed	1.High speed motor 2.Low speed motor 3.Constant speed motor and speed motor

Working principle of motor. Alternating current dynamo.

The single-phase AC motor is separated from the phase AC by the capacitive phase shift, and the phase difference of the other phase is 90 degrees of the alternating current. Divide the two alternating current respectively into groups of two or four motor coil winding, in the motor to form a rotating magnetic field, rotating magnetic field in the rotor of the motor generate induction current, magnetic field generated by the induction current and rotating magnetic field in the opposite direction, rotating

magnetic field push and pull into the rotation, because the rotor must be cutting magnetic line of force to generate induced current, so rotor speed must below the rotary magnetic speed, it is referred to as the asynchronous motor.

DC motor. DC motor has a stator and rotor is composed of two parts, the stator poles (winding or permanent magnet), the rotor winding, electricity, the rotor on the formation of magnetic field (magnetic), between the poles of the stator and the rotor is a angle, the rotor magnetic field (between N and S poles of) the mutual attraction, the motor rotation.

Motor structure. 1) Permanent magnet type DC motor (Figure 1)

From the stator pole, rotor, brush, shell and other components. Permanent magnet motor with brush single sheet metal or metal graphite brush, electrographite brush.

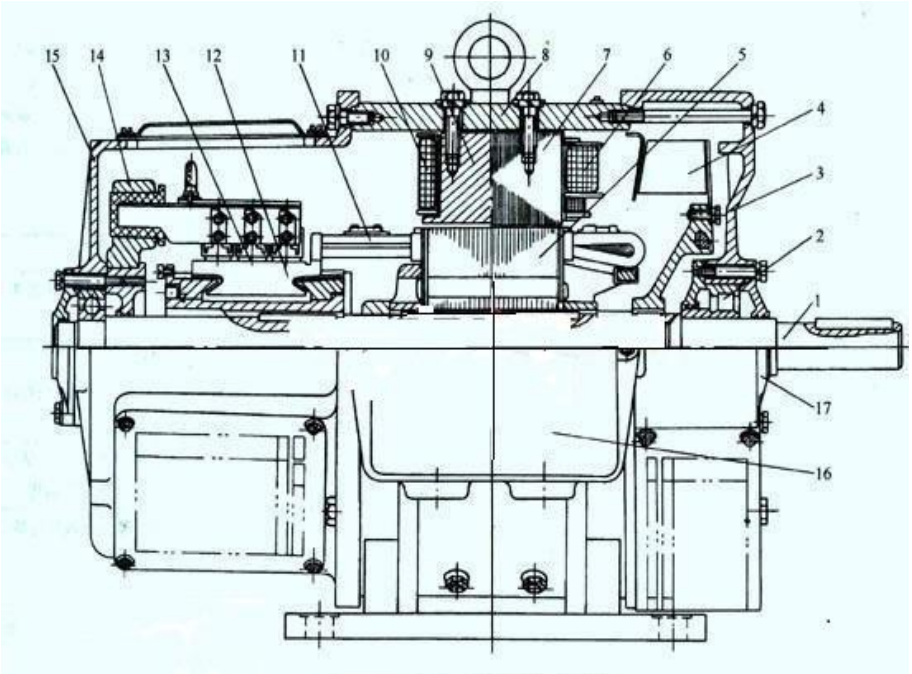

1- axis,2- bearing,3- back-end cover,4- fan,5- armature core,6- main pole winding,7- main pole core,8- base,9- reversing pole core,10- reversing pole winding,11- armature winding,12- commutator,13- brush,14- brush holder,15- front cover,16- outlet box,17- bearing cover

Fig. 1 Structure diagram of permanent magnet motor

2) Brushless DC motor:

From permanent magnet rotor, multipole winding stator, position sensor and so on.

The position sensor has three types of magnetic sensor, photoelectric and electromagnetic..

Speed controller for electric vehicles

Classification of speed controller. The electric vehicle controller is divided into two kinds from the structure. It is called the separation and the integral type.

1) Separation: the separation is the separation of the controller subject and the display part. The latter is installed on the handlebar. The main controller box is hidden in the body or the electric box, not exposed.

2) Integrated: the control part and the display part are integrated, packed in a special delicate plastic box. The box is installed on the handlebar of the middle panel. The box is provided with a small hole number. The corresponding position of the hole is provided with a light emitting diode in order to indicate the speed, the power source and the remaining battery of the battery.

Speed controller system. Main form: speed (speed) control of the main form of speed, speed and deceleration control three categories.

Realization method: the method of realizing speed control is much, there are mechanical, hydraulic and electrical. The motor control system of an electric motor should be based on the complexity of the algorithm and choose the appropriate microprocessor system. For electric vehicle motor controller, the general complexity of the DSP processor should be used.

Necessity of developing electric vehicles

Reducing greenhouse gas emissions in the transport sector are the important means to solve the global climate change, and are the prerequisite for the construction of sustainable development of electric vehicles. The world's major national governments, organizations have developed a strict vehicle emissions standards, aiming at reducing the impact of traffic areas on the global climate and environment.

Diesel vehicles and alternative fuel vehicle application scale, advanced vehicle technology development and application of a certain degree can reduce vehicle emissions, but from a long-term point of view, they cannot fully meet the future low carbon traffic demand. For the development of a long period of time, highway traffic will use traditional vehicles, alternative fuel vehicles and new energy vehicles parallel development, and ultimately the development of low carbon or no carbon highway traffic mode, to enhance human awareness of environmental protection, sound policies and regulations and technical standards system, which is full of intellectual property protection, together constitute the social main body of electric automobile of our country.

Conclusions

Technology research and development of the electric vehicle cannot be the participation and coordination of the government departments, and it is developed by the joint of many large enterprises.. This aspect shows that electric vehicles involve many technical fields. On the other hand, the application of electric vehicles requires the implementation of government policies and measures.. It can be said that the overall development of electric vehicle technology to the car itself and the entire vehicle industry will revolutionize the development of.

References

[1] Zhanyuan Zhu. Electric vehicle [M]. Zhengzhou: the Yellow River Water Conservancy Press, 2007.

[2] Guiming Wang. Electric vehicle and its optimization [M]. Beijing: mechanical press, 2010.

[3] Quanshi Chen. Fuel cell electric vehicle [M]. Beijing: Tsinghua University press, 2005.

[4] Xinghu Li. Introduction to electric vehicles. Beijing: Beijing Institute of Technology press, 2005.

[5] Hui Song. Electric vehicle [M]. Beijing: People's transportation press, 2002.

[6] Hui Song. Fuel cell [S] for electric vehicles. World car, 2002.

[7] Fengchun Li. Electric vehicle [M]. Beijing: Beijing Institute of Technology press, 1997.

[8] Development history of electric vehicle [M]. Land ark electric car knowledge encyclopedia, 2011.

[9] The main structure and working principle of electric vehicle [M]. China new energy network, 2011.

[10] Lin Gao, Bo Zhao. The practical significance of developing electric vehicles in China [M]. Canada, 2010.

[11] Fengchun Sun, electric car Beijing [M]. Beijing: Beijing Institute of Technology press, 1997.