Visualization of Virtual Maintenance Constraints

Shi Yongsheng
Civil Avation University of China
Tianjin 300300, China

Fan Jie
Civil Avation University of China
Tianjin 300300, China

***Abstract*—To resolve problems of virtual maintenance system for aircraft, based on the analysis of domestic and international research, propose constraint visualization framework based on virtual disassembly object model. Discusses the main modules of the system, ways to achieve functions and key technologies. The system can define the basic information of parts and assemble constraints by visual ways. Based on the function of this system implementation, we can see the system's application prospect.**

Keywords-Virtual maintenance, Aircraft, Visualization, Constraint

I. PREFACE

Virtual maintenance is the use of virtual reality technology in the maintenance of the equipment, it broke through the maintenance of equipment's constraints in space and time, which can achieve realistic equipment disassembly, fault maintenance and other operations. aircraft systems is complex, high cost, and have a lot of faults which make it hard to maintain. Because of the cost of physical training is high, the virtual maintenance system of the aircraft is of great significance.

However, the virtual aircraft maintenance system which have complex structure, large amount of model information, complex constraints between models is hard to define disassembly sequence. The proposed virtual maintenance constraints visualization system define the basic information of the aircraft components and constraints between models in the man-machine interface, which will improve the accuracy of constraint relations, interactive and Maintainability.

II. VIRTUAL DISASSEMBLY OBJECT MODEL

First task is to establish a virtual disassembly object model, then extracting these models related information in the process of the Virtual disassembly, such as: part of the geometric features, structural relations, dismantling constraints. Use these data we can achieve virtual disassembly in virtual environment.

The core problem of disassembly object modeling is how to express and store disassembly object relationships between the various component parts in the computer. The mutual relations include disassembly structural relations, disassembly constraint relations. Currently, the describe of removable data structure object information can be categorized as two types: (1) directly to store the location information between there movable components; (2) store the cooperation, connection and other demolition installation information between the removable components. The homogeneous transformation matrix which determine the location of disassembly parts is calculated based on these information.

Virtual disassembly object model is the basis of virtual disassembly process, to describe the maintenance process of dismantling objects need at least two parts: one is the physical object disassembly information, another part of the information is the relationship between the disassembly object, Therefore, we need to create virtual disassembly model from both entities and relationships.

Information contained in the disassembly unit solid model is static, which will not change in the maintenance disassembly process. But the mutual relation of the disassembly unit is dynamic change in the maintenance disassembly process. The core problem of disassembly modeling is how to describe the relationship between the storage of the disassembly unit in dynamic ways.

Virtual disassembly model can be divided into two types basically: one is the relationship disassembly model, the other is the hierarchical disassembly model. Disassembly model consider the maintenance objects are formed by the various parts and their relationships, dismantling objects can be represented by D, D = {P, R}, where P = {P1, P2, ..., PN} used to represent the collection of parts, R = {R1, R2, ..., RN} which is the set of relations between parts. Hierarchical model consider that disassembly object include multiple sub-objects and parts, and each sub-disassembly object is composed by its sub-objects and parts, the entire disassembly object preformed as hierarchy.

A. Hierarchical model

The disassembly object can be decomposed into different levels of components and parts. Components can be broken down into different levels of sub-assemblies and components, sub-components are likely to continue to be broken down into lower level sub-components and parts. The hierarchical relationship between components and parts can be represented by the hierarchical tree structure, shown in Figure 2. Root of the tree is a removable unit, decomposition of leaf node is parts which can not be detached, the middle node is a sub-component. Hierarchy reflects the parent-child affiliation between components and parts. The Hierarchical model has manifested the design method well from the top which has merits such as the clear structure, easy to maintain. At the same time this kind of hierarchical structure has provided the basic reference for the disassembling sequential program, but

Published by Atlantis Press, Paris, France.

can not consider that is the reasonable knocked-down and assemble sequence, the reasonable knocked-down and assemble order must be restrainted by the geometry restraints to relate and the disassemble restraints. Advantage of hierarchical model used to meet the people's thinking, can reflect the structure of disassembly objects well, and can reduce the number of components each layer, reducing the complexity of analysis; disadvantage is that the description of the disassembly parts relationship is not intuitive, is not conducive to get the reasonable sequence between the various components in the same level, sub-division of the object do not have a clear rules, the model generation often requires human intervention.

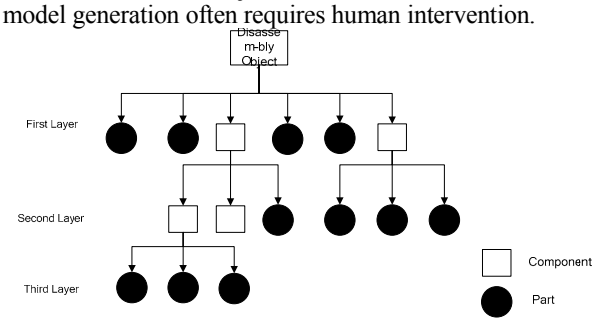

Figure 2. Hierarchical model

B. Relationship model

The relationship between the disassembly objects is represented by the relationship model. Relationship model is shown in Figure 3, the node denote the disassembly unit, the connection between nodes denote the relationship between the disassembly unit. Relationship model is more intuitive, convenient for various information access management and follow-up directly. Disadvantage is that description often carried out at the same level, the actual structure does not meet the product and people's habits of mind, and the number of product parts can not be too big. Otherwise, this will bring great difficulties in planning disassembly in the future, and will bring complexity when disassembly model information used in other areas.

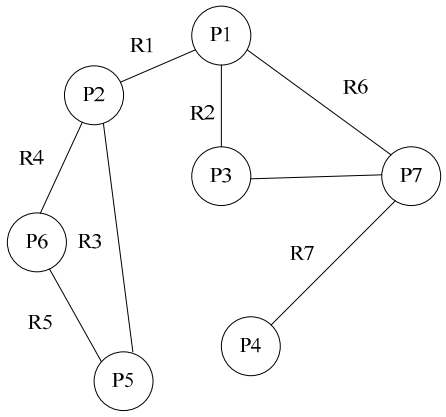

Figure 3. Relationship model

C. Hierarchical and interactive model

View of the hierarchical model's disadvantage that description of the relationship between parts is not intuitive, relationship model is not suitable for disassembly model which have huge number of parts, this paper proposes a model which admixture relationship model and hierarchical model. Figure 5, the circles represent parts, components and parts are connected by arc with direction. Part A1, A2, A3, B, C in the demolition of the first layer. D1, D2, D3, D4 in the same layer, E1, E2, F1, F2 in the same layer, G, H, I in different layer. D1, D2, D3, D4 can be took down only when A1, A2, A3 are all removed. Parts in the same layer don't have order, may belong to the same type of parts, or belong to the same components. In Figure 5, when the D1, D2, D3, D4, and B G demolition only after completion of the demolition. G can be domolished only when D1, D2, D3, D4, and B are removed. D1, D2, D3, D4 are constrainted by A1, A2, A3, G by D1, D2, D3, D4, B.

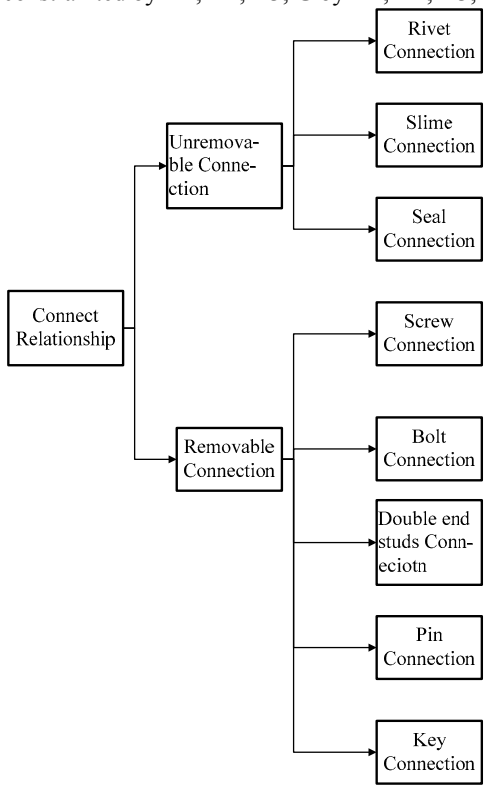

Figure 4. Connection diagram

Point arc at all levels include connect relationship of all parts ,the parts' connect relationship can be split into detachable connection and disdetachable connection (destructive connection). Shown in Figure 4, the removable connection including screws, bolted connections, stud connection, pin connection, key connections. Riveting, bonding, welding and other methods is used to fix two or more connected disassembly units together in an effective way, named as disdetachable connection in maintance.

Point arc in the disassembly of the part can also define the necessary equipment, personnel and methods of disassembly the part ,the part dismantling time and other remove constraints, so the hierarchical model and the relationship model are combined very well.

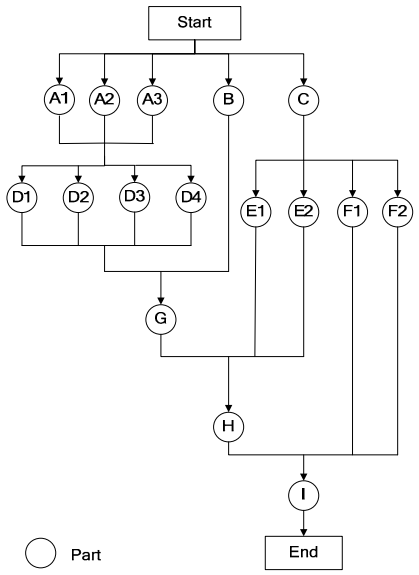

Figure 5. level interaction model diagram

III. CONSTRAINTS VISUALIZATION BASED ON HIERARCHICAL AND INTERACTIVE MODEL

To each part of Virtual Maintenance system ,their basic information and disassembly information can be defined in the visual interface. Visual constraint definition interface is shown in the figure. In figure 6, the circles represent parts; parts and components are connected by arc. ① part the property include name, type, quality, material, size, which can be expanded according to the need; ② arc the property include the necessary dismantling equipment, tools, personnel, demolition method, the time required for dismantling, parts connection ways, which can also be expanded according to the need.

A. disassembly constraintt sequence

We name sequence which restrict part's disassembly as the part's disassembly restrict sequence. Only when the part demolition of all the component model have been removed, the part can be removed. In Figure 5, D1, D2, D3, D4's disassembly restrict sequence are A1A2A3,G's binding sequence of disassembly is BD1D2D3D4.

B. installation constraint sequence

We name sequence restrict parts' installation as the part's installation constraint sequence, and only when all the parts in the sequence are installed, the part can be installed. In Figure 5, B's installation constraint sequence is G , C's sequence is E1E2E3E4.

Sequence of demolition and installation is the first step of the judgement whether this part can be removed or installed. After the judgement we have to determine the conditions such as personnel, tools, equipment, and other conditions are met or not, if these conditions are met,we can assemble and disassemble.

C. The definition of constraint visualization process

The user define the basic information and constraints in visual interface, and store parts' information and arc's properties into the database. Parts' property need to store contains the name, coordinates, type, quality, material, size.In addtion, name must be the same as 3D model in virtual dismantling environment. The arc segments' property required to store contains the name of the part which is the start of the arc segment, the name of the part which is the end of the arc segment, a section of the arc coordinate sequence of dismantling, the necessary equipment, tools, personnel, demolition method, the time required for dismantling, parts' connect way.

Figure 6 is the diagram of constraint visualization process designed for virtual maintenance, the user can refer to part's 3D model to define part's constraint in visual way . Y-frame is shown in retractable device model, for example, during the definition, the user first load the 3D model and then select a part in the parts list, at the same time, corresponding to the part model will be labeled red. Through the operation in the interface, map part constraint structure and define the connections, equipment, tools and demolition methods to complete the definition of part's constraint in visual way.

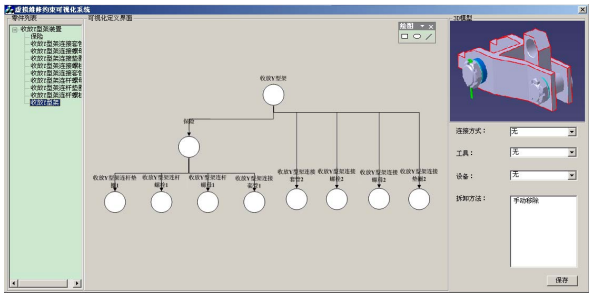

Figure 6. Graph of the constraint visualization definition program for virtual maintenance

IV. CONSTRAINT VISUALIZATION SYSTEM USED IN VIRTUAL MAINTENANCE SYSTEM

Figure 7 is a virtual flight maintenance simulator, before the first step of dismantling operation, load the data file into the virtual aircraft maintenance system which generated in the constraint visualization system, the data files include components' basic information and parts' disassembly constraints information.

When do the virtual dismantling, choose a part, first determine the part of the disassembly constraint sequence were all removed or not, if it is then go to judge the demolition of the parts needed personnel, tools, equipment and other constraints are met or not, If it is then the part can be removed.

When do the virtual installation, choose a part to be installed, first determine the part of the installation constraint

sequence were all installed or not, if it is then go to judge the installation of the parts needed personnel, tools, equipment and other constraints are met or not, If it is then the part can be installed.

Figure 7. Figure of Flight Virtual Maintenance Simulator

The system use Visual C + +6.0, and SQL server 2005, integrate virtual maintenance system and aircraft-related data, empolder program meet the system functions' need. The system is suitable for complex systems, systems have large parts database to define the constraint. Define part's basic information and constraints in the visual interface have such merits as clear, intuitive, easy to operate and avoid errors when store or compare large amount of data by manpower.

REFERENCES

[1] Corvaglia D. Virtual Training for Manufacturing and Maintenance based on Web3D Technologies [C] Proceedings of LET-Web3D 2004:1st International Workshop on Web3D Technologies in Learning,Education and Training. Udine, Italy: University of Udine, October 2004: 28-33.

[2] Parallel Graphics. Main landing gear torque links removal Demo[EB/OL]. (2005-12-25) [2007-7-10].

[3] Marian R M, Luong L H S, Abhary K. A genetic algorithm for the optimization of assembly sequences[J].Computers& Industrial Engineering, 2006,50:503-527.

[4] Liu Zhenyu,Tan Jianrong,Zhang Guoyou.Research of level information expression for virtual assembly products[J]. Computer Aided Design and Computer Graphics transaction, 2001, 13(3): 223-228.

[5] Zhang Tingkai,Wang Chuansheng.Research of product's Hierarchical structure model and its demolition method [J].Mechanical Engineer, 2005, 2: 78-80.

[6] Yang Yuhang,Li Zhizhong,Zheng Li. Review of Virtual Maintenance[J]. System simulation transaction , 2005 , 17(9):2191-2198

[7] Hao Jianping. Virtual maintenance simulation theory and technology[M].Beijing：National Defence Industry Press，2008