Design on electric supercharger controller based on Brushless DC motor

Bingyong Gou[1,a], Yanqiu Yang[2,b] and Honggang Guo [3,c]

[1] Chongqing telecommunication polytechnic college, Chongqing China, 402247

[2] Chongqing Public Security Bureau, Chongqing, 401147, China

[3] Chongqing SME development Service Center, 401140, China

[a]173481173@qq.com, [b] Ljy1970000@163.com, [c]67069473@qq.com

Keywords: Brushless DC motor, Electric pressure, Speed regulation

Abstract. Three-phase brushless DC motor is adopted as the drive motor for electric turbocharger in the paper. The selection of DC motor without position sensor is adopted three-phase star connected two-two excellent performance conduction mode as electric machine work to simplify the circuit structure design, and improve the reliability of the system. It clears the function of the controller, the circuit design requirements, and the key algorithm driven brushless DC motor ----the rotor position detection algorithm and speed control algorithm. The controller can obtain the operating condition of the engine in real time, realizes the electric booster double closed-loop control of engine speed and load control based on the effective promotion of pressurization effect of the engine under different conditions.

Introduction

Electric booster system is mainly composed of a motor and a compressor is composed of two parts, the motor rotates to drive the coaxial connection compressor rotation in order to achieve the purpose of increasing the intake. But the existing electric supercharger can't according to the power condition real-time adjustment of compressor engine, thus boosting effect and power consumption can reach the ideal condition. According to the working requirements of engine, puts forward a design scheme of Brushless DC motor based on three-phase electric booster controller, in order to improve the charging effects, reduce power consumption.

Structure of electric turbocharger

A variety of structure forms electric turbocharger diversity. According to the electric supercharger is independent in a single-stage turbo charging system can be divided into electric auxiliary booster system and electric booster system two types.

Electrically assisted turbocharger system

Electric auxiliary pressurization system is the electric motor and the exhaust gas turbocharger integration design, install auxiliary motor a part-time motors and generators in the turbocharger shaft. Electric motor assisted in the pressurization system must meet the requirement of formula (1)

$$\frac{M_T+M_{EL}-M_C}{J_{TP}+J_{EL}} > \frac{M_T-M_C}{J_{TP}} \qquad (1)$$

In the formula, M_T is the turbine, M_{EL} is the output torque of motor , M_C is The consumption of compressor torque. and compressor consumption of torque, J_{TP} and J_{EL} are the corresponding inertias.

Electric turbocharger system

Electric turbocharger system is mainly composed of a motor and compressor components, by the battery to driving motor through the inverter power supply or motor. The rotating motor drives the compressor rotating coaxial connection to achieve the purpose of increasing the intake in

© 2015. The authors - Published by Atlantis Press

working. Electric booster systems are usually associated with the exhaust turbocharger connected in series to form a composite supercharging system.

But the motor speed selection of the electric supercharger in low, generally in the thousands or tens of thousands turn around per minute, and the output power and the motor speed of the motor should satisfy formula (2), the formula shows that: in a small motor power, high speed, smaller output torque of motor.

$$P = \frac{M \times n}{9550} \quad (2)$$

In small engines, the installation difficulty using electrically assisted turbocharger system of large, complex, high cost control mechanism, at present the rare application; because of its compact structure, small volume, the use of electric turbocharger and exhaust gas turbocharger series work mode. Therefore, this paper puts forward the direct use of electric supercharger inlet pressure increases for small general purpose engine.

Design of the electric supercharger controller

Function design of electric booster controller

Electric booster controller is mainly composed of a central control unit, throttle position sensor, speed measuring unit, motor driving unit, voltage / current detection unit and other components, figure 1 is the electric booster controller function block diagram.

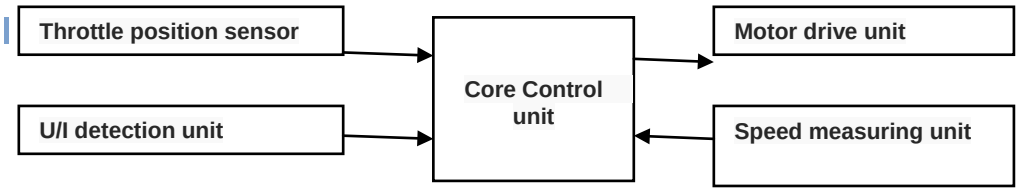

Fig1 Electric booster controller function block diagram

The core control unit real-time detection of throttle position sensor and speed, integrated throttle opening and change rate of throttle position, get the operating condition of the engine, and then adjust the brushless DC motor speed, change the boost pressure electric supercharger. At the same time, the core parameters of working current control for real-time detection of motor unit input voltage, the implementation of the comprehensive protection of the electric supercharger.

Circuit design of electric booster controller

The electric supercharger uses non brush DC motor controller as a power source, main control motor speed control, the need to complete the following two aspects.

1) Commutation control: for the motor position sensor, regularly commutation signals according to the position sensor, which is communicated with the correct choice of electricity and power; for motor without position sensor, according to the induction electromotive force calculation phase change point, determine which communicated with electricity and power.

2）Speed control. The average voltage control motor armature to realize the speed control by PWM. To improve the reliability and reduce the controller hardware complexity of the system, the system adopts three-phase rotor position senseless brushless DC motor, to detect the rotor position using the induction electromotive force of the armature winding. The controller uses the dsPIC30F2010 MCU as the main controller, motor control PWM module in the MCU has 6 complementary, through the MOSFET direct drive motor; a 6 channel 1Msps conversion rate of the 10 ADC module, can measure three-phase armature winding induced electromotive force, the operation current of the motor, throttle position and the voltage of the battery; 5 16 counter, can be configured to counter 32, measuring the speed of the engine. Brushless DC motor generally adopts full bridge driver, using three-phase star connection two two brushless DC motor conduction mode. Fig2 is the schematic diagram of the circuit of the electric boost controller. DsPIC30F2010 single-chip microcomputer as the main control chip, motor control PWM module through the 3 half bridge driver ISL6700 drive three groups of MOSFET, MOSFET using IRFZ48N, one end of the

W, V, U three-phase windings of Brushless DC motor in parallel, and the other end is respectively connected to the driving end of each bridge arm.

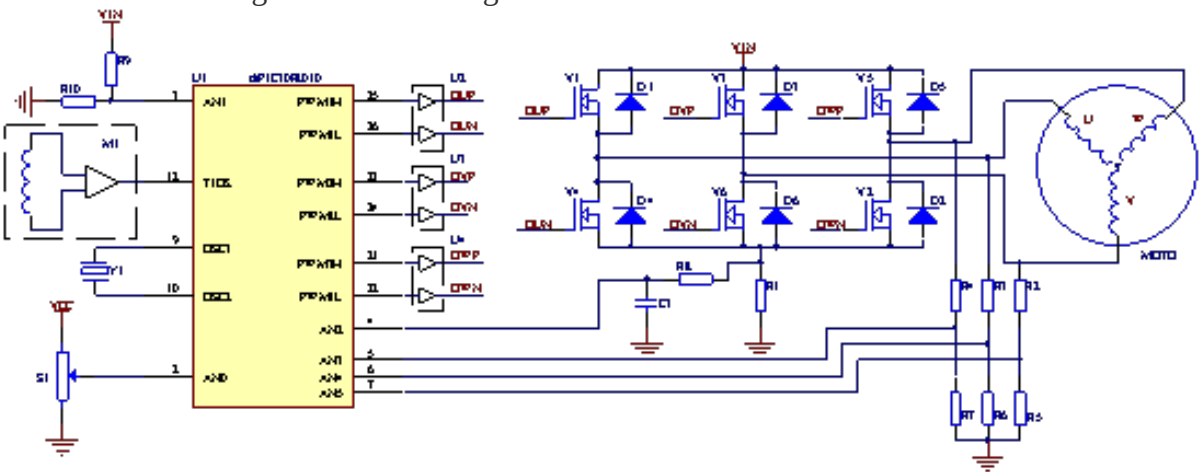

Fig2 The controller circuit schematic diagram

The control algorithm of electric booster controller

The main function of electric booster controller is to automatically judge the operating condition of the engine, and adjust the motor real-time speed to change the boost pressure. The control algorithm of controller has two core contents: one is the Induction EMF of three-phase full bridge of star connection two conduction type brushless DC motor using the terminal voltage of the zero crossing method detection, two is a DC motor speed regulating method.

Fig3 shows the brushless DC motor of any phase model. L is the phase inductance, R is the equivalent resistance, E_x is the induction electromotive force, I_x is working current, V_x is the phase voltage, V_n is the neutral point connected in star voltage.

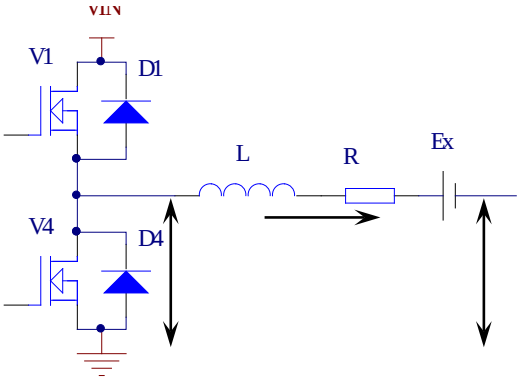

Fig3 Motor phase electrical stator either model

From the fig3: $V_x = RI_x + L\frac{dI_x}{dt} + E_x + V_n$ (3)

For the electric motor three-phase two two conduction mode, each phase at the same time, electricity, the current in the opposite direction, and the other one phase power, voltage equation can thus be listed U, V and W phase, and the three equations can beaded.:

$$V_U + V_V + V_W = E_U + E_V + E_W + 3V_n \quad (4)$$

Through the known work by the star two-two guide, regardless of which phase Induction EMF zero crossing time, $E_U + E_V + E_W = 0$, so zero moment in the induction electromotive force$V_U + V_V + V_W = 3V_n$. For the phase power, I_x=0, so $E_x = V_x - V_n$。Judging by the Induction EMF direction changes, can determine the zero time delay, and 30° electrical degrees to get commutation. In the control process, the first measured the previous phase change time interval of T, and then take t/2 as a delay time of 30° is the estimation method. Three phase brushless motor full bridge driver star two two conduction mode of each electrically connected rules as shown in the following table:

Tab1 Electricity law is turn two-two conduction mode

Rotor position	0~60°	60~120°	120~180°	180~240°	240~300°	300~360°
Conducting switch	V1、V2	V2、V3	V3、V4	V4、V5	V5、V6	V1、V6
U phase	+		-	-		+
V phase		+	+		-	-
W phase	-	-		+	+	

Usually the DC motor speed regulation is by adjusting the turn-on switching tube PWM duty cycle to achieve, to brushless DC motor three-phase star connection two-two conduction mode. There are 5 kinds PWM control mode, as PWM_ON, ON_PWM, H_PWM-L_ON, L_PWM-H_ON and H_PWM-L_PWM. Considering each of the ON_PWM mode switches normally open and shut off in the alternate conduction, and the switch loss, low requirements, small heat dissipation device stress small. The torque ripple of the speed control uses ON_PWM way in the commutation process.

Conclusions

To improve the booster effect of small engine, the paper presents a design scheme of Brushless DC motor based on three-phase electric turbo controller. It mainly expounds the electric booster controller function design, circuit design and algorithm design, principle of the electric pressure controller based easily realizing the electric booster double closed loop control based on the engine speed and load. To better operating electric supercharger engine, engine speed and load in different speed achieved under the boosting effect is obvious.

Reference

[1] Liu Ruilin, tube blonde. The electric supercharger status of application technology of [J].small internal combustion engine and motorcycle, 2009:41~43.

[2] Li Wenxiang, Ge Yunshan and so on, the electric supercharger application technology research of [J]. automobile technology, 2005:8~12.

[3] T.Katrasnik,S Rodman, F.Trenc. Improvement of dynamic characteristic of an automotive engine by a turbocharger assisted by an electric motor, Journal of Engineering for Gas Turbines and Power-Transactions of the ASME, 2003,125:590~595.

[4] Changliang Xia. Based on the RBF neural network on-line identification of permanent magnet brushless dc motor single neuron PID model reference adaptive control [J]; Journal of electrotechnics,2005(11)

[5] Tingtian Shi, Yang Tian. Based on the wavelet network of permanent magnet brushless dc motor without position sensor control [J]; Journal of Tianjin university, 2007(02)