Comparison between Three Different Types of Variable Step-Size P&O MPPT Technique

B.R. Peng, J.H. Chen, Y.H. Liu, Y.H. Chiu
Department of Electrical Engineering
NTUST Taipei, Taiwan, R.O.C

***Abstract*—The P-V curve of solar cell is nonlinear, depending on both illuminance and temperature. The MPPT technique is compulsory in order to maintain the output power of the solar cell at its maximum value. P&O MPPT technique is the most commonly used in the industry; however, the main problem is to strike a balance between tracking time and tracking accuracy. To solve the problem, variable-step size MPPT algorithms have been reported in the literatures. In this paper, three different types of variable step-size MPPT methods are implemented and compared.**

Keywords- MPPT; P&O MPPT; variable-step size MPPT

I. INTRODUCTION

In recent years, with the depletion of fossil fuels, the energy costs have been increasing. People started to pay much attention to the environmental issues, and renewable energy plays an important role in meeting the world's power demand. In all kinds of renewable energy, one of the most commonly accepted is the solar power system due to its relatively less pollution and lower maintenance fee. However, to make photovoltaic generation system (PGS) more competitive in the energy market, it is important to lower its cost and improves its energy efficiency. MPPT technology is a way to improve efficiency, which allows the system to operate at the maximum power point (MPP) and will immediately adjust itself to re-track the new MPP when the environment changes [1]. So far, several MPPT methods have been proposed [2-5], while the realization of these methods exist the problems of system complexity and the balance between tracking-time and tracking-accuracy. Ref. [6] proposed a traditional P&O MPPT technique with trade-off between step-size, tracking-time and tracking-accuracy. Ref. [7] used variable step-size P&O with PI control to achieve MPPT. Although this method can reduce tracking time, it will increase the complexity of the system which makes it hard to realize. Ref. [8] proposed a variable step-size P&O method in which the perturbation step is obtained by a fixed ratio multiply by the derivative of the power with respect to the voltage. It not only can effectively shorten the tracking time, but reduce the steady-state oscillation as well. Nevertheless, parameter setting of this method has influence on the system response to a certain extent. Besides, this method may not be suitable for all kinds of characteristic curves. Ref. [9] proposed a two-stage variable step-size P&O method. By using the output power and voltage variation amount (ΔP and ΔV) of the PV module, the system itself can adjust its step-size according to the operating point (OP) on the curve.

II. SYSTEM CONFIGURATION

It is well-known that P&O method exist the tradeoff between tracking-time and tracking-accuracy. To verify that variable step-size MPPT methods can effectively improve this problem, a model of PGS is constructed and simulated. In this paper, the software PSIM from POWERSIM corp. is adopted, the simulated PV MPPT system is shown in figure 1. PSIM provides a powerful and efficient environment for power electronics simulation needs. The advantages of PSIM include easy to use and fast simulation time. In this model, boost converter is adopted as the power stage circuit. The sampled signals of output voltage and output current of PV module were taken as the inputs of the controller. Via calculation, the controller obtains the command signals (duty cycle) from the voltage and current signal. The command signals were then sent to the driver to control the power MOSFET in order to regulate the load power. By adjusting the duty cycle, the OP will move toward the maximum power point.

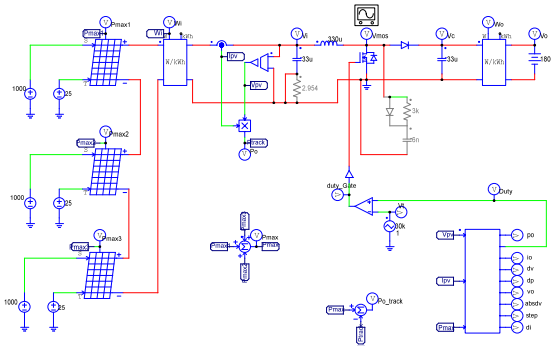

FIGURE I. THE MODEL OF THE PHOTOVOLTAIC MPPT SYSTEM

III. INTRODUCTION OF THE SIMULATION OF THE MPPT METHOD

The P-V curve of the photovoltaic module is presented in figure 2. It can be used to develop the desired MPPT method.

FIGURE II. THE P-V CURVE OF THE PHOTOVOLTAIC MODULE

The brief introduction of the traditional P&O algorithm is considered, and the flow chart of the traditional P&O algorithm is shown as figure 3.

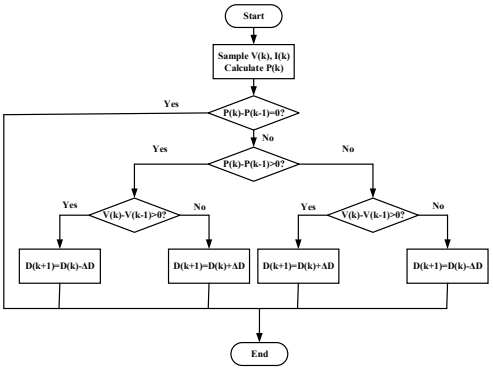

FIGURE III. THE FLOW CHART OF THE TRADITIONAL P&O ALGORITHM

As shown in figure 3, the traditional P&O method sampled the voltage and current, and the power can be obtained by multiplying the two values. Through the power and voltage variation, the direction of the perturbation can be determined. Since the boost converter is used as its power stage in this paper, the duty cycle is inversely proportional to the voltage. When both power variation and voltage variation are greater than zero, the OP is on the left-hand side of the P-V curve and moves toward the MPP. When the power variation is greater than zero and voltage variation is smaller than zero, the OP is on the right-hand side of the P-V curve and moves toward the MPP. Therefore, the direction of perturbation needs not change under these two conditions. When power variation is smaller than zero and voltage variation is greater than zero, the OP is on the right-hand side of the P-V curve and moves away from the MPP. When both power variation and voltage variation are smaller than zero, the OP is on the left-hand side and also moves away from the MPP. The perturbation direction should be inversed under these two conditions. Through proper adjustment of the duty cycle, the OP can be kept near the MPP.

In this paper, three different types of variable-step size P&O methods are compared; including PI type [7], M type [8] and Two-section type [9]. Figure 4 shows the flow chart of the PI type P&O.

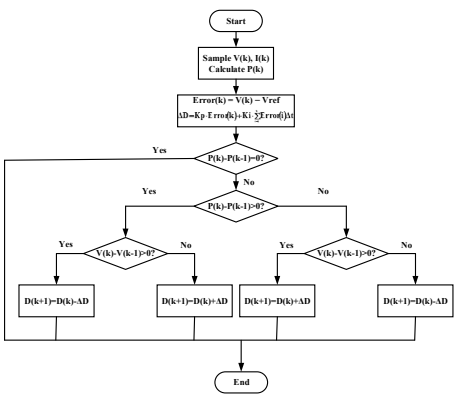

FIGURE IV. THE FLOW CHART OF THE PI TYPE P&O

Through sampling and calculation, the maximum power point is tracked successfully by determining the step size according to the present and previous values of voltage and power variation. Figure 5 shows the flow chart of the M type P&O.

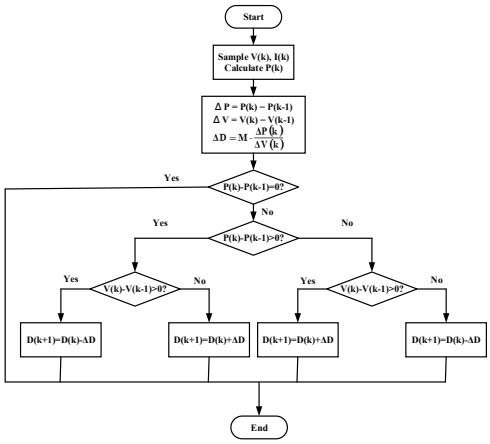

FIGURE V. THE FLOW CHART OF THE M TYPE P&O

From figure 5, the perturbation step-size was determined by both **M** and $\Delta P / \Delta V$. Figure 6 shows the flow chart of the Two-section type P&O.

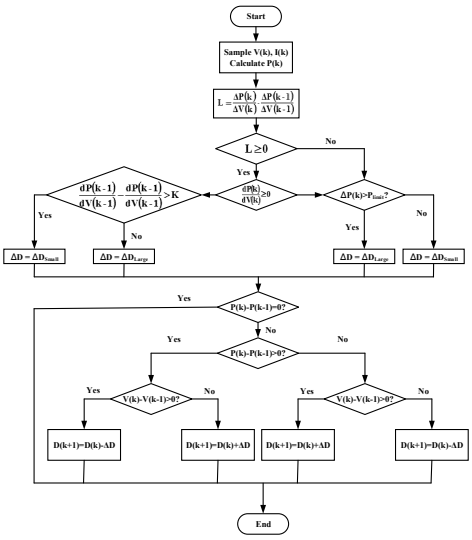

FIGURE VI. THE FLOW CHART OF THE TWO-SECTION TYPE P&O

Figure 6 shows the flow chart of two-section type P&O. The basic concept of operation in figure 6 is very similar to figure 3. The only difference is that there are two kinds of the perturbation step value, one for the condition when the OP is far away from the MPP, and one for the condition when OP is near MPP.

IV. MODELING AND SIMULATION

The simulation is performed for all the three MPPT methods when the insolation level is 1000W/m2. Figure 7 shows the simulated result of the three different variable step-size P&O method, the simulate results are summarized in table 1.

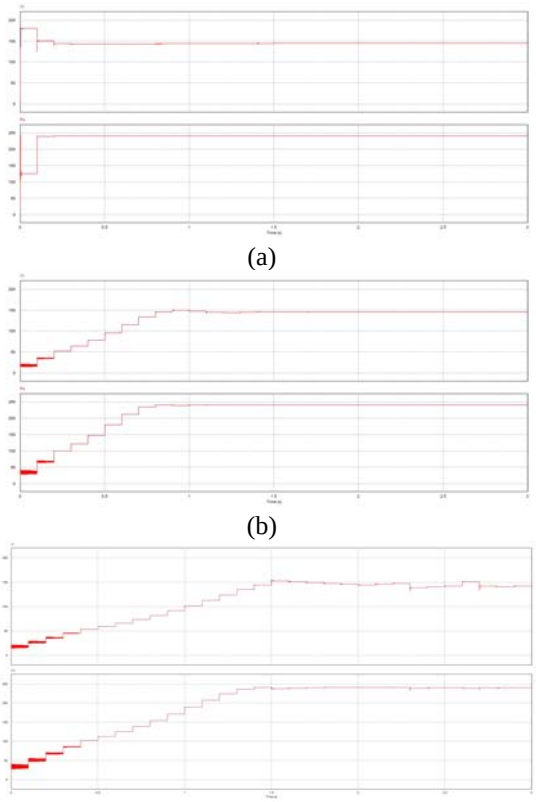

(a)

(b)

(c)

FIGURE VII. SIMULATION SOLUTION (A) PI TYPE VARIABLE STEP-SIZE P&O (B) M TYPE VARIABLE STEP-SIZE P&O (C) TWO-SECTION VARIABLE STEP-SIZE P&O

TABLE I. COMPARISON OF THE DIFFERENT MPPT

	Traditional P&O	PI Type P&O	M Type P&O	Two-section Type P&O
Rise Time	1.3002 sec	0.1004 sec	0.7007 sec	1.3002 sec
Steady-state Time	1.3023 sec	0.1007 sec	0.8001 sec	1.3023 sec
Steady-state Average Power	238.73 W	240.45 W	240.60 W	239.64 W
Steady-state Tracking Accuracy	99.15%	99.87%	99.93%	99.53%
Tracking Energy Loss	149.85 J	11.87 J	83.13 J	148.10 J
Average Tracking Power Loss	49.95 W	3.96 W	27.71 W	49.37 W

As shown in figure 7 and table 1, the structure of tradition P&O is quite simple, but the oscillation near maximum power point is large and so is the steady-state error. The PI type P&O can effectively reduce steady-state oscillation and the tracking-time; however, this method is too complex to realize. The M type P&O tends to have better response in both transient-state and steady-state. Yet, not only the factor, M, is hard to determine; a constant M value cannot be adopted for all kinds of characteristic curves. Though the two-section type P&O can also reduce the steady-state error, the degree of reduction is less than others. In addition, the transient tracking time is longer, which causes the overall performance only better than the traditional P&O.

V. CONCLUSION

In this paper, the three different types of variant step-size P&O are simulated and compared using PSIM. According to the simulation results, the transient response of PI type P&O is the fastest among all. However, the complexity of this method is also the highest. The algorithm complexity of the M type P&O and the two-section type P&O are simple, the M factor of the former one is hard to decide while the steady-state tracking accuracy of the latter one is the lowest among all.

REFERNECE

[1] D. Shmilovitz, “On the control of photovoltaic maximum power point tracker via output parameters,” IEE Proc.-Electr. Power Appl., Vol. 152, No. 2, 2005, pp.239 – 248.

[2] R. R. Ali, H. M. Mohammad, J. Shahriar, “Classification and comparison of maximum power point tracking techniques for photovoltaic system : A review,” Renewable and Sustainable Energy Reviews, vol. 19, 2013, pp. 433 – 443.

[3] I. Kashif, S. Zainal, “A review of maximum power point tracking techniques of PV system for uniform insolation and partial shading condition, “ Renewable and Sustainable Energy Reviews, vol. 19, 2013, pp. 475 – 488.

[4] S. Zainal, A. Jubaer, S. M. Benny, “The application of soft computing methods for MPPT of PV system: A technological and status review,” Applied Energy, vol. 107, 2013, pp. 135 – 148.

[5] Trishan Esram, Patrick L. Chapman, “Comparison of Photovoltaic Array Maximum Power Point Tracking Techniques,” IEEE Transactions on Energy Conversion, vol. 22, no. 2, 2007, pp. 439 – 449.

[6] T.J.A. Santos, A. Galhardo, “A Perturbation and Observation Routine Used To Control A Power Converter, “2014 Sixth World Congress on Nature and Biologically Inspired Computing (NaBIC), 2014, pp. 78 – 83.

[7] K. A. Ahmed, M. M. Ahmed, A. Shehab, N. E. Prasad, “High-Performance Adaptive Perturb and Observe MPPT Technique for Photovoltaic-Based Microgrids, “ IEEE Transactions on Power Electronics, vol. 26, no. 4, 2011, pp. 1010 – 1021.

[8] P. Ashish, D. Nivedita, K. M. Ashok, “High-Performance Algorithms for Drift Avoidance and Fast Tracking in Solar MPPT System,” IEEE Transactions on Energy Conversion, vol. 23, no. 2, 2008, pp. 681 – 689.

[9] C. Zhang, D. Zhao, J. Wang, G. Chen, “A Modified MPPT Method with Variable Perturbation Step for Photovoltaic System,” IPEMC '09. IEEE 6th International Power Electronics and Motion Control Conference, 2009, pp. 2096 - 2099.