Studies on Single-flow Continuous Culture Control System of Simulated Rumen in Vitro

Ying Zhang[1, a], Liang Zheng[2, b], Xiaoxia Chen[2, c], Bo Xu[1] and Lianyu Yang[1]

[1]School of Jilin Agricultural University, Changchun 130118, China

[2]School of Jilin Agricultual Science and Technology College, Jilin 132101, China

[a]zy_smc@ 163.com, [b]374267631@qq.com, [c]462754949@qq .com

Keywords: rumen, continuous culture in vitro, control system, rumen fermentation.

Abstract. For accurate research of rumen fermentation and regulation mechanism, a new single-flow continuous culture control system of simulated rumen in vitro (hereinafter called SCCCS) has been designed, with advanced computer control technology and mechanical design technology. This SCCCS has many advantages of function, for example: the work-flow control and the parameter setting and display can be achieved through the friendly man-machine interface; sealed fermentation tank; , replaceable grilles with different aperture sizes; two stirring modes including intermittent, unidirectional rotation and back-and-forth rotation, adjustable service time; two homothermal water-baths; two peristaltic pumps with adjustable speed. This SCCCS reveals that the different aperture sizes of the grilles and the two stirring modes have different influence on fermentation parameters. The experimental results show that fermentation parameters of the rumen of sheep are the most approximate to that in the SCCCS with ratio of concentrate to roughage in diet of 30 to 70, the grille of 200 mesh and the intermittent, unidirectional rotational stirring method.

Introduction

Ruminant use the rumen for fermentation that help to obtain energy and protein, from the coarse fiber and nonprotein nitrogen[1], and the research of regulatory mechanism of ruminant rumen fermentation has great significance for livestock production. The traditional way of research is using the living cattle and sheep and so on for experiments in vivo but with defects include long cycle test, risk of fistula operation, individual differences and high cost, then the artificial rumen technology based on simulating fermentation in vivo works up [2].This tech comes in two main types of culture include batch mode and continuous mode. The batch culture has several sub modes of Autogenesis [3], Two-Steps [4], Simple-Digestion [4], etc. However, the process of rumen fermentation in vivo is continuous because that the substrate feed and buffer continuous come into and the chyme in solid phase and liquid is discharged. Therefore, the continuous mode is more similar with that process compared with the batch mode Since Warner[5], a variety of devices have been developed including Rusitec device by Czerkawski [6], CC device by Hoover[7], Dual-flow continuous culture device by Meng Qingxiang [8] from China Agricultural University, etc. , which have been successfully applied. However, there are still some main common shortcomings on these devices, as follows: poor sealing, inconvenient packing, stirring difficultly, etc. In this paper, it shows a new control system called SCCCS to solve the above problems.

Mechanical structure and control system design of SCCCS

Mechanical structure of SCCCS. The mechanical structure of SCCCS shows in figure.1. The fermentation tank is used to simulate the rument in vivo which is as a container for culturing anaerobic microorganism. The stirring system in the tank stirs in different modes to simulate the rumen fermentation. The amount of the rumen contents of the ruminant is little changed after eating and drinking, the osmotic pressure and the blood pressure maintain balance, and the range of the rument’s temperature is 38 to 41 ℃ (39 ℃ in average), one homothermal water bath (the constant

temperature is 39 ℃) here is used to simulate this status, another water bath (the temperature is between 0 and 4℃) is used to set up an constant temperature environment with a bottle for collecting chimy kept in to. Two peristaltic pumps under control are used for pumping the buffer into the tank and pumping the chyme out into the bottle. The rumen can't secrete digestive enzymes themselves, but the microorganisms that living in it can secrete extracellular enzymes, intracellular enzymes and etc. to ferment the forage chewed and swallowed. These anaerobic microorganisms can only survive in an oxygen-free environment and therefore the tank is sealed up tight to simulate this environment. The pH value of this environment is in a range of 6 to 7 which is a complex combination of interaction between the volatile fatty acids in chyme and the buffer salts in saliva, outflow of the volatile fatty acids with chyme, absorption of volatile fatty acids by ruminal epithelial cells and other factors. 12 tanks are set up for comparative tests.

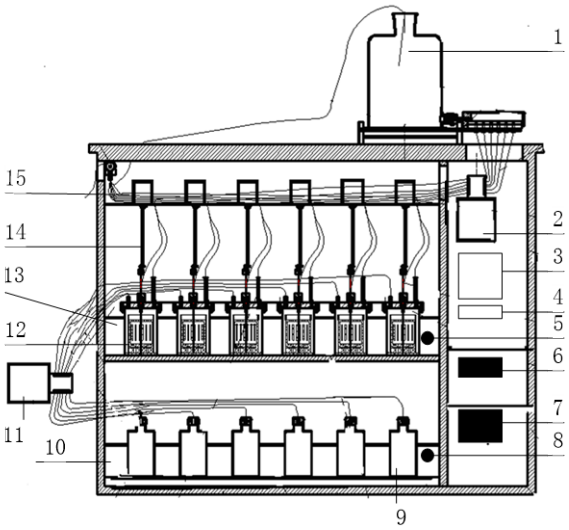

1 Bottle with buffer solution,2 Peristaltic pump No.1,3 Touch screen, 4 Controller, 5 Circulating pump No.1, 6 Heater, 7 Cooling pump, 8 Circulating pump No.2, 9 Bottle for collecting chyme, 10 water bath (the temperature is between 0℃ and 4℃), 11 peristaltic pump No.2, 12 fermentation tank, 13 homothermal water bath(the constant temperature is 39 ℃), 14 link rod, 15 stepper motor

Fig.1 The mechanical structure of SCCCS

Control system design of SCCCS. The architecture of the control system with the SCM (Single Chip Microcomputer) 89S51 as the core and the Devine's touch screen as the man-machine interface is shown in Figure 2.

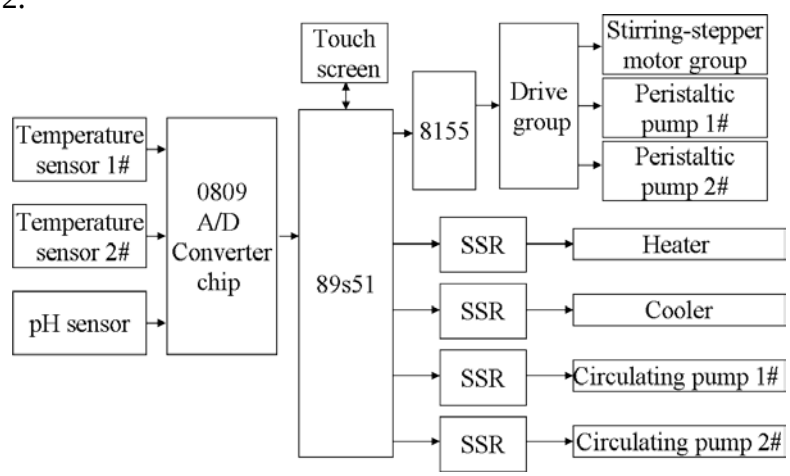

Fig.2 The architecture of the control system

Stepper motor control. The stirring system in the tank is constituted of two groups of impellers fixed on the link rod which is driven by a stepper motor. 8155 programmable chip is used to output pulse signals to the stepper motor driver to drive the stepper motor for controlling the stirring system

to stir the forage in a certain rotational rate and direction, as shown in figure 2. Each tank has one stirring system in it and there are 12 stirring systems in all.

The rumen stirs the forage through ruminal motility slowly but high efficiency. As similar as that, the efficiency of simulated rumen depends on the stirring mode. To simulate the ruminal work as possible, two stirring modes including intermittent, unidirectional rotation and back-and-forth rotation used in the SCCCS are compared in the experiments. The rotational rate and direction of each stirrer can be flexibly set through the touch screen. The stirring systems are defined to work continually for 25 minutes and then pause for 5 minutes [9].

Temperature control of water baths. As mentioned above, the temperature control is used in both water baths of the SCCCS, shown in figure 2. The analog signals of the water-bath temperature detected by the temperature sensors (Product Model:PT100)are amplified by the amplification circuit and then convert to digital signals after being input the A/D converter chip (Product Model:ADC0809). The single chip microcomputer (SCD) receive the digital signals from the sensor 1# and then output the control signals to control the working time of the heater according to the temperature and pre-established PID control strategy , in order to control the temperature within the range of 39 ± 0.5 ℃. The SCD compares the temperature values from sensor 2# with 4℃ set as the upper control limit and 0℃ set as the lower one and then output the control signals to start the cooler if it is higher than the upper limit or stop that if below the lower limit. One circulating pump is equipped with in each tank and it works simultaneously when the cooler or heater at work to ensure temperature uniformity of water.

Experiments

Experimental design. Two-factor factorial experimental method is used in this experiment to analyze the synergistic influence of two main factors of aperture size and stirring mode on the SCCCS. There are four aperture sizes of the grilles including 200 mesh, 100 mesh, 80 mesh and 60 mesh and two stirring modes including intermittent, unidirectional rotation and back-and-forth rotation to be choose from in this method. . Dilution rate of the SCCCS is set to 3% of the tank volume per hour and the flow rate of the buffer is set to 0.5ml per minute in that case, the feed amount is set to 12g per day. Three tanks with the same aperture size of the grilles in are set as a group and there are four groups that each corresponds one size. The live sheep is set as the control group. The experimental period is 9 days.

From the first day of experiment, the sample fluids are collected from the fermentation tanks and the sheep which has been fistula operated before feeding omni mane (the time value is set to 0 hour). Specifically, the sample fluid with the amount of 20ml from the SCCCS is sucked out with a syringe from the liquid taking tube be put in the liquid chyme outflow port of the tank. That from the sheep rumen is sucked out with a rigid PVC pipe. The pH values of the fluids removed are measured with high-precision acidimeter (mode: pHS-3B) immediately and then, every sample fluid is divided into two equal parts, One part is used to measure NH3-N concentration with colorimetric assay which is a method for NH3-N concentration measurement of ruminal fluid improved by Feng Zongci et al (1993) [12] after centrifugation in a speed of 3500r / min,

Another part is centrifuged in a speed of 3000r / min, then its supernatant is mixed with met phosphoric acid according to the corresponding proportion of 5ml to 1ml.The mixture will kept at -20℃ for further test of volatile fatty acid (VFA).

The statistical analysis of the experimental data is based on Two-factor factorial experimental method with SPSS17.0 (Statistical Product and Service Solutions, software version 17.0). LSD (Least Significant Difference) method here is used for the significant test of the multiple comparisons of mean values.

Results and Analysis. PH values and NH3-N concentration of the sample fluids change with different stirring modes and aperture sizes, the data are shown in Table 1.

Table 1 The percentage changes of pH value, NH3-N concentration, VFA molar ratio and TVFA concentration with different stirring modes and aperture sizes

Items		Intermittent, unidirectional rotation				Back-and-forth rotation			
		200mesh	100 mesh	80 mesh	60 mesh	200 mesh	100 mesh	80 mesh	60 mesh
pH value		6.35± 0.226	6.33± 0.211	6.43± 0.193	6.41± 0.231	6.66± 0.173	6.68± 0.146	6.74± 0.232	6.71± 0.112
NH3 - N concentration(mg/100mL)		6.60^{d}± 1.483	6.74^{c}± 1.761	7.24^{b}± 1.631	7.52^{a}± 1.571	7.20^{d}± 2.759	8.36^{c}± 3.662	8.94^{b}± 3.506	9.64^{a}± 0.447
VFA molar ratio(%)	acetic acid	64.01± 4.205	68.87± 2.412	65.48± 3.005	66.47± 2.864	68.94± 2.058	71.92± 2.378	70.11± 2.441	69.17± 2.074
	propanoic acid	34.63^{a}± 4.226	29.19^{b}± 2.518	32.67^{c} ±3.028	31.18^{d} ±2.723	29.55^{a}± 2.089	26.53^{b}± 2.199	28.17^{c}± 2.235	29.06^{d}± 2.129
	butyric acid	1.35^{a}± 0.098	1.93^{b}± 0.093	1.83^{c}± 0.106	2.33^{d}± 0.098	1.43^{a}± 0.089	1.73^{b}± 0.090	1.74^{c}± 0.085	2.01^{d}± 0.087
	acetic acid / propanoic acid	1.88± 0.110	2.37± 0.117	2.02± 0.119	2.15± 0.110	2.34± 0.079	2.73± 0.089	2.51± 0.092	2.39± 0.097
TVFA concentration (mmol/L)		27.50± 1.910	29.93± 1.786	27.87± 2.063	29.05± 1.910	35.45± 2.289	36.947± 2.492	35.31± 3.301	32.74± 1.444

Note: the data in the same line with different superscript letters have significant difference..

As shown in Table 1, when the stirring mode of intermittent, unidirectional rotation changes into back-and-forth rotation, pH values increase significantly (P <0.01).There is no interaction between stirring modes and aperture sizes (P <0.05).

NH3-N concentration under the stirring mode of back-and-forth rotation is significantly higher than that under intermittent, unidirectional rotation (P <0.01). There is interaction between stirring modes and aperture sizes.

Acetic molar ratio increases with the increase of the aperture size but not significantly (P> 0.05) and it under the stirring mode of back-and-forth rotation is significantly higher than that under intermittent, unidirectional rotation (P <0.01).

Propionate molar ratio increases with the decrease of the aperture size but not significantly (P> 0.05) and it under the stirring mode of intermittent, unidirectional rotation is significantly higher than that under back-and-forth rotation (P <0.01).

Butyric molar ratio increases with the increase of the aperture size significantly (P <0.01) and it under the stirring mode of intermittent, unidirectional rotation is significantly higher than that under back-and-forth rotation (P <0.01).

The ratios of acetic molar ratio to propionate molar ratio under different stirring modes and aperture sizes have no significant difference (P >0.05), which shows no change in the type of fermentation.

Conclusion

The above analysis shows the influence on the ruminal fermentation parameters by the change of stirring modes, which are as follows:

The first two days of the experimental period is an adaptation time for fermentation in the tank and then the pH values and NH3-N concentration of the SCCCS will tend to be steady in the rest days. PH value, NH3-N concentration, TVFA concentration and acetic molar ratio under the stirring mode of intermittent, unidirectional rotation are all significantly higher than that under back-and-forth rotation but the propionate molar ratio and butyric molar ratio are lower.

The experimental results show that fermentation parameters of the rumen of sheep are the most approximate to that in the SCCCS with ratio of concentrate to roughage in diet of 30 to 70, the grille of 200 mesh , the intermittent, unidirectional rotation stirring method and 9 days of the experimental period.

References

[1] R.J. Ronald: Symposium on Microbial Digestion in Ruminant: in Vitro Rumen Fermentation Techniques: J.Animal Sci, (1963) No.22, p.792.

[2]Z. H. Wang, X.Z. Hou and P.F. Li: Studies on Fungi Growth and Fermentation Parameters in Use of Dual-flow Continuous Culture System with Different Dilution Rates: Feed Industry Magazine, (2006) No.27, p.21.

[3] K.H. Menke, L. Raab and A. Salewski: The Estimation of the Digestibility and Metabolisable Energy Content of Ruminant Feeding Stuffs from the Gas Production when They are Incubated with Rumen Liquor: Journal of Agricultural Science, (1979) No.93, p.217.

[4] J.M.A. Tilley and R.A. Terry: A Two-stage Technique for the Digestion of Forage Crops: Journal of the British Grassland Society, (1963) No.18, p104.

[5]Warner and A.C.I: Criteria for Establish the Validity of in Vitro Studies with Rumen Microorganism in so called Artificial Rumen System: J.Gen.Microbiol, (1956) No.14, p733.

[6] J.W. Crzerkawski: Rumen studies (Pergamon Press Ltd., Oxford 1986).

[7]Hoover, W.H.B.A. et al.: J.Dairy Sci, (1989) No.72, p.2991.

[8]Q.X. Meng: Dual-flow Continuous Culture System for Simulating Rumen Fermentation in Vitro (Technical review): Chinese Journal of Aminal Nutrition, (1995) No.11, p.45.

[9]Q.X. Meng and Z.Y. Gao: Influence of Dilution Rate on Growth Efficiency of Fermentation and Microbial in Vitro Rumen: Chinese Journal of Aminal Nutrition, (1999) No.11, p.10.

[10] E.I. McDougall: Studies on Ruminant Saliva: The Composition and Output of Sheep's Saliva: Biochem.J., (1949) p.43.

[11] Q. Meng, M.S. Kerley, et al.: Fermentation Substrate and Dilution Rate Interact to Affect Microbial Growth and Efficiency: J.Anim.Sci. (1999) No.77, p.206.

[12]Z.C. Feng and M. Gao: Improvement of Colorimetric Assay for NH3-N Concentration Measurement of Ruminal Fluid: Inner Mongolian Journal of Animal Sciences and Production, (1993) No.4, p.12.