Analysis on the design of the Integrated DC Regulated Power Supply and its Failure Diagnosis

Luo xiaohui [1, a]

[1] Chongqing college of electronic engineering Chongqing China 401331

[a] luohui54@126.com

Keywords: Integrated DC Regulated Power Supply; Design; Fault judgment

Abstract. The rapid development of power electronic technology makes the DC regulated power supply performance get a boost, you can see the figure of DC regulated power supply in the military, civil and scientific research areas, it is as the basic element of the electronic technology, and is also is an important component of the modern electronic equipment and electronic equipment. The practical experience shows that a lot of electronic equipment failure is caused by the DC regulated power supply failure. Therefore, The DC regulated power supply failure diagnosis and maintenance is worthy of study. This article mainly discusses the design of the integrated DC regulated power supply and fault judgment.

Introduction

In the modern industrial technology, the engineering practical power supply technology, especially the NC power supply technology. The NC power supply technology similar to today's power supply technology, combined with electrical, electronic, system integration, control theory, materials and other fields, and put forward the higher request, has stronger practicability. NC power supply widely used in electronic devices, to a certain extent solved because of the common power at work the influence of the error and precision of the whole system. Below we will analyze the numerical control DC power supply, know how to effectively solve the power supply module, intelligent and product stability, reliability and so on engineering problems. Because the new electronic equipment for various interference are sensitive, so, in order to realize its function, and ensure the stable operation, in terms of power and design quality excellent DC regulated power supply, to meet the requirements of all kinds of electronic circuit for power supply. In the process of research of DC regulated power supply, the current of DC regulated power supply voltage method is roughly divided into two kinds of simulation method and digital methods. Let's carry out specific analysis on the two methods. The simulation method, we use constant pressure constant current power supply is analyzed; Numerical methods, we use the digital regulated power supply is analyzed.

The Overview of the Integrated DC Regulated Power Supply

DC power supply, DC power supply) has both positive and negative electrodes, the anode potential is high, the cathode potential is low, after the two electrodes and the circuit is connected, able to maintain a constant potential difference between the circuit at both ends, thus in the external circuit formed by the positive to the negative current. Electrostatic field generated by electric charge alone cannot sustain stable constant current, and by using DC power supply, can use the electrostatic interactions (non electrostatic force) to make a positive charge by potential low negative by the power of the internal returns to the potential of high positive, in order to maintain the potential difference between two electrodes, steady current to form. DC power supply, therefore, is an energy conversion device; it converts to other forms of energy to power supply circuit, in order to maintain a steady flow of current.

a. The summary of the power system as a whole

According to the division system function, can be roughly divided into three parts: chassis, power supply main circuit and the power control circuit. Chassis is mainly ACTS as fixed and shielding. Power main circuit is responsible for the power conversion applications, through the proper control circuit to change the output voltage, can convert to the desired DC output voltage. It described in the control circuit, meet in the main circuit of the practical need of control pulse and various protective functions. In the power supply for each part in the process of the development of serious analysis and research, complement the parts become unified whole to meet the design requirements. DC regulated power supply in order to make the integration equipment normal work exert its maximum performance, we must make every part of the power supply, power supply in the process of the research and design of mutual coordination and cooperation, we must let the power of various components of mutual coordination and collaboration in the development of the power supply and deal with this problem in the process of design to give enough attention.

b. Transformer

Integration of DC regulated power supply output voltage is usually according to the requirements of the equipment. On the choice of transformer choice, should follow the following principles. First of all, in the case of a 220 V ± 15%, realize the reliable, stable output voltage, should not only consider the integrated voltage stabilizing circuit minimum input output pressure difference, consider two diode bridge rectifier circuit consumption is to the pressure drop; Second, the transformer keep more than 20% of the current allowance. DC - DC converter is mainly used for power conversion. The whole bridge circuit of the transformer core and winding is for three-phase rectifier circuit DC - DC converter input voltage of the voltage of the selected voltage switch more appropriate choice, can get the optimal efficiency, power density continuous optimization; On the other hand, the largest reverse voltage does not exceed the input rectifier filter circuit output voltage. In the conduction of the road, need more power components, at least two pipe pressure drop, so the power loss is big, but because of the three-phase bridge rectifier provided due to the high DC voltage, so the power consumption is still under control. At present, the commonly used full bridge converter has the traditional hard switching type, resonance and phase shift.

c. The control circuit

Another important part of integrated DC regulated power supply system is the control circuit. In order to work efficiently, DC - DC converter control circuit needs to provide the appropriate drive pulse. If not perfect control circuit, even if the main circuit design again good, no matter how also unable to play their functions, for example: if the trigger signal control circuit output instability or triggered by accident, may lead to direct switch bridge, cause a short circuit, causing damage of components. According to the functional division of the circuit of the control circuit can be divided into several parts: the pulse generator circuit, trigger circuit of voltage feedback control circuit, the soft start circuit, protection circuit, and auxiliary power supply circuit and so on. As the core of control circuit of pulse generating circuit, the pulse generating circuit of voltage feedback control circuit, protection circuit and a soft start circuit provides the required pulse signal of control signal, the pulse signal, and then amplified by the trigger circuit to drive components, so that the switch is on or off.

The Design of the Integrated DC Regulated Power Supply and its Failure Diagnosis

a. The input section

Power input part is with a 220 v transformer after transformer access of ordinary ac power grid, the stabilized voltage supply versatility, high use value, produced the power supply has practical significance. Is 220 v input transformer used in this design, 20 v2a output, is characterized by low output voltage, within the scope of the safety voltage, rated output current of the transformer to reach 2 a, regulated power supply by the input power is not enough to achieve maximum output current and voltage, or the waste caused by high input power transformer.

b. The rectifier part

The transformer output voltage through the rectifier into pulsating DC voltage, the process of called a rectifier. Commonly used rectifier circuit with single-phase rectifier, single-phase full-wave rectifier, and single phase bridge rectifier, doublers rectifier, multiphase rectification and silicon controlled rectifier, etc. Here are two rectifier circuit used in this circuit as a simple introduction.

(1) The single phase bridge rectifier

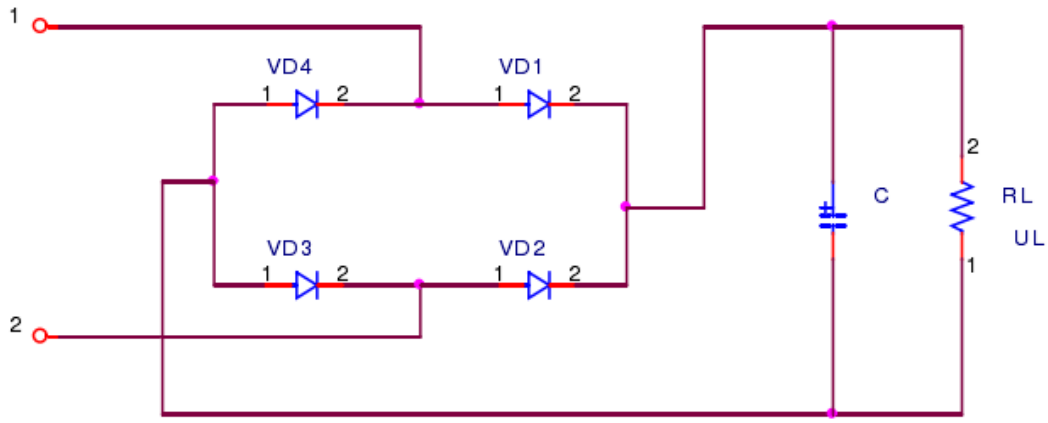

Figure 1: Single phase bridge rectifier circuit

Single phase bridge rectifier circuit is the full-wave rectifier circuit diode quantity used twice as much, but in the circuit reverse voltage withstand jointly by two diodes connected in series, and through the current is smaller.

(2) The times the pressure rectifier circuit

To be higher than the transformer secondary voltage of DC voltage, can use doublers rectifier circuit. It has the advantage of the available pressure lower power supply transformer, capacitor and rectifying device; a DC output voltage is more than the peak value of input voltage rectifier circuit.

c. The filtering part

The ordinary low frequency electrolytic capacitor in Hz or so began presenting perceptual, unable to meet the requirements of the use of switching power supply. And dedicated high frequency switch power supply aluminum electrolytic capacitor has four terminals, the anode aluminum respectively at both ends of the derivation as capacitor anode, cathode plates at both ends of the extract as the cathode, respectively. Current flow from a four terminal capacitance is end, through internal capacitance, and then from another is end to load; Returning from the load current is also flows from the capacitance of a negative end, again from another negative side to negative power supply.

In the design of power supply filter capacitance selection principle is:

$$C \geq 2.5\frac{T}{R}$$

Among it:

The C is filter capacitance, the unit for UF;

The T is the frequency, the unit for Hz;

The R is the load resistance, the unit is Ω。

This is, of course, only the general selection principle, in the actual application, such as conditions, space and cost) allows, they were selected $C \geq 2.5\frac{T}{R}$.

d. Protect part

A lot of specific form current protection circuit, according to the working principle of the main divided into two categories, current limiting and cut-off. Current limiting protection circuit is to point to exceed specified value, the load current power supply output voltage drop, to ensure that does not continue to increase the load current. By type protection circuit is in the load current

exceeds specified value, automatic voltage regulator circuit is cut off, the output voltage is small or zero. After a short circuit or overload troubleshooting, protecting tube back off condition, regulating circuit automatically resume normal work. The circuit is characterized by simplicity, the disadvantage is that protection after adjust the tube power consumption increased. When load short circuit, adjust the power consumption of the tube can be up to four times the size of the normal work under the maximum power consumption. To be on the safe side, using transistor current limiting type over-current protection, adjust the tube should increase heat dissipation area or switch to a P_{CM} more transistors.

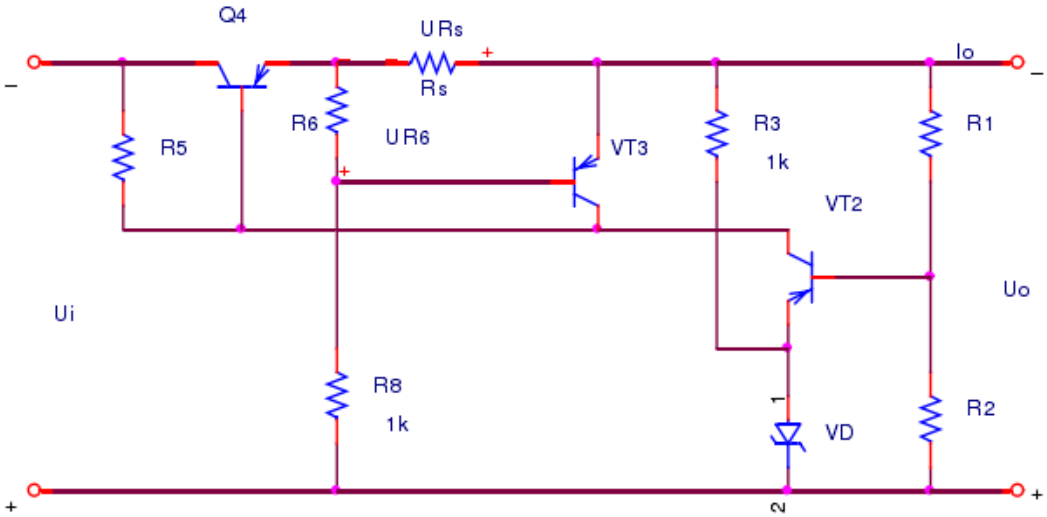

Figure 2: The transistor reduced flow pattern protection circuit

As available transistor type protection circuit, the circuit, etc. As protection circuit is divided into two kinds of circumstances, a circuit can't automatic recovery, once the overload, to cut off the circuit, load circuit back to normal, with a reset button to restart the power supply; Another is automatic recovery circuit, after normal load current, circuit automatic recovery.

Summary

Due to the progress of electronic technology, the electronic equipment for the requirement of power supply circuit is able to provide a steady, satisfy the requirement of load power, and is normally required to provide stable DC electricity. The stable DC power source is DC regulated power supply. The DC regulated power supply in power supply technology occupies very important position.

References

[1]Wobschall, D, Prasad,H. S. "Esbus-a sensor bus based on the SPI serial interface". Sensors,2002.Proceedings of IEEE. 2012.

[2]Y.R. Yang.An adjustable linear power supply with a phase-shift PWM tracking pre-regulator. IEEE 30th Annual Conference of Industrial Electronics Society. 2012.

[3]An Shi-qi,Qi An-ning, Zhu Yu-wei. Design and realization of SPI interface in lithium ion battery voltage measuring system. Computer Science & Education (ICCSE),2011 6th International Conference on. 2013.

[4]Ladond,E, Mur,M., Schanne, S. The digital ASIC for the Digital Front End Electronics of the SPI astrophysics gamma-ray experiment. Nursing Science. 2012.

[5]Dunfan Ye,Xifeng Wang, Dongwei Liu. Design of a Low-cost and High-performance DC Linear Power Supply Using in Electronic Experiment. Cross Strait Quad-Regional Radio Science and Wireless Technology Conference (CSQRWC). 2011.

[6] Zarebski J, Gorecki,k. The electrothermal model of the linear power supplies. IEEE Circuits and Systems Magazine. 2013.