A method to implement NOR、OR optical gate Based on a single SOA's NPR effect

Xia Shi
College of Information Engineering
Communication University of China
Beijing, China
524414671@qq.com

Yalin Guan
College of Information Engineering
Communication University of China
Beijing, China
ylguan@cuc.edu.cn

Abstract—We propose a method to implement NOR、OR optical gate Based on the nonlinear polarization rotation (NPR) effect of a single Semiconductor optical amplifier (SOA). This method is theoretically analyzed and simulation experimentally verified. Both the NOR and OR logic gate can be achieved by adjusting the polarization state of light signal under the condition of without changing its structure.

Keywords- SOA; NPR; NOR; OR

I. INTRODUCTION

First of all, to have wide-bandwidth communications, the switching technologies must be improved. Electronic technology no longer will be adequate where the speed of conventional computers is achieved by miniaturizing electronic components to a very small micro-size scale so that those electrons need to travel only very short distances within a very short time. The goal of improving on computer speed has resulted in the development of the Very Large Scale Integration (VLSI) technology with smaller device dimensions and greater complexity. But VLSL technology is approaching its fundamental limits in the sub-micron miniaturization process. Further miniaturization of lithography introduces several problems such as dielectric breakdown, hot carriers, and short channel effects. All of these factors lead to a seriously degrade device reliability. Therefore, a dramatic solution to the problem is needed.

Light is immune to electromagnetic interference because of its ability of traveling at high speed without charging or interacting of its photons with each others. Consequently, light beams can pass through one another in a full-duplex operation with wavelengths in order of 1 micron. A higher bandwidth capacity and a transmission of a massive amount of information over a beam are obtained. Optical data processing can be done much easier and less expensive in parallel that can be done in electrons. Parallelism is the capability of the system to execute more than one operation simultaneously. Then the parallelism associated with fast switching speeds would result in staggering computational power. A computation that might take more than eleven years by the conventional electronic computer could be performed by an optical computer in only one single hour. Thus the optical-switching technology and the development of optical logic are required to eliminate the optical/electronic conversion. Their operation can scale with the data rate and they have further properties of data regeneration, gain, cascade-ability and implementing more complex operations than possible with a simple switch.

High speed all-optical logic gates are key elements in next generation optical networks and computing system to perform optical signal processing function, such as all-optical label swapping, header recognition, parity checking, binary addition and data encryption. In the last few years, several approaches have been proposed to realize various logic gates using either high nonlinear fibers or semiconductor optical amplifiers (SOA). The SOA-based devices have the potential of monolithically integration, which offer the advantages of compactness, increased reliability and the cost reduction. Up to now, most SOA based logic gates have been performed by employing cross gain modulation (XGM) and cross phase modulation (XPM), which inevitably limit the operating speed of such devices due to the intrinsic slow carrier recovery time of SOA. Although the operating speed can be increased to higher with the use of a high power continuous wave holding beam or different interferometer structures, the complexity and the cost of devices are increased.

In this paper, we propose a novel logic gate based on Based on the nonlinear polarization rotation (NPR) effect of a single Semiconductor optical amplifier (SOA). It can generate two logic functions by simply adjusting the polarization state of light signal under the condition of without changing its structure. We successfully demonstrated reconfigurable logic operations NOR and OR using 10Gbit/s NRZ polarization signals[1-3].

II. PRINCIPLE

The nonlinear polarization rotation effect in SOA is also named as cross-polarization modulation effect when comes to light-to-light problem. Due to the asymmetric structure of SOA, the birefringence of SOA itself makes the effective refractive indexes of TE and TM modes in SOA different, thus the phase changes on the TE and TM modes are also different. When a wave goes through SOA, the polarization will be changed. In pump probe light applications, because of the additional birefringence of the pump light, the polarization state of the probe light will also be modulated by the pump light. The polarization property of light transmitting in SOA is very complicated.

© 2014. The authors - Published by Atlantis Press

On one hand it is adverse to other nonlinear effects in SOA application; on the other hand it can be applied in all-optical wavelength conversion, optical logic gates. The principle of NPR is shown as follows with simple theoretical derivation and analysis.

For the sake of simplicity, assume that the light entering SOA is linear polarized, the angle between the polarization direction and the TE axis of SOA is θ, the input light signal has an amplitude of E and an initial phase of φ_0 (usually zero), $\vec{\mu}_{TE(TM)}$ is the unit vector of the horizontal(or vertical) axis .the input light can be expressed as:

$$\vec{E}_0 = E\left(\vec{\mu}_{TE} cos(\theta)\,\vec{\mu}_{TE} + \vec{\mu}_{TM} sin(\theta)\right)e^{i\varphi_0} \qquad (1)$$

The light field transmitting in SOA can be expressed as:

$$\vec{E} = \left(\vec{E}_{TE} e^{i\Delta\emptyset_{TE}} + \vec{E}_{TM} e^{i\Delta\emptyset_{TM}}\right)e^{i(\omega t - kz + \varphi_0)} \qquad (2)$$

$\vec{E}_{TE(TM)}$ is TE (or TM)component of the light transmitting in SOA and the corresponding phase shift is $\Delta\emptyset_{TE}(\Delta\emptyset_{TM})$.$\vec{E}_{TE(TM)}$ can be expressed as:

$$\begin{cases} \vec{E}_{TE} = \rho E\, cos(\theta)\vec{\mu}_{TE} \\ \vec{E}_{TM=} E\, sin(\theta)\,\vec{\mu}_{TM} \end{cases} \qquad (3)$$

Where ρ is the single-pass gain ratio of TE and TM mode. The phase shift for the two modes of the light signal passing through SOA is given by

$$\Delta\emptyset_{TE} = \frac{2\pi L n_{TE}}{\lambda} \qquad (4)$$

$$\Delta\emptyset_{TM} = \frac{2\pi L n_{TM}}{\lambda} \qquad (5)$$

So the phase difference between the two modes can be expressed as:

$$\Delta\emptyset_{TE-TM} = \Delta\emptyset_{TE} - \Delta\emptyset_{TM} \qquad (6)$$

In formula (4) and (5), L is the length of SOA gain medium, λ is the wavelength of the light signal, $n_{TE\ (TM)}$ is the effective refractive index of the two modes. Because the gain of TE and TM mode and the refractive indexes are different when they pass through SOA, the polarization state of SOA's output signal (usually the elliptic polarization state) is different from that of the input signal, thus the nonlinear polarization rotation happened. Obviously, the polarization state of the output signal is determined by the size of parameter ρ and the phase difference: $\Delta\emptyset_{TE-TM}$[4-10].

The principle of the all-optical NOR、OR gate based on the NPR effect of a single SOA is shown in Fig.1 Signal A, B and the probe light CW are put into the SOA at the same time. The polarization controller (PC) is used to adjust the polarization state of the detecting light CW. SOA has different limiting factors and refractive indexes in the directions of TE and TM because of its asymmetric structure, so the polarization state of the probe light will rotate a certain angle after passing through SOA. The magnitude of the rotate angle depends on the initial polarization state of the detecting light CW and the power of signal A, B. A polarizer is added at the output end of the SOA to convert polarization modulation into intensity modulation.

In order to realize the NOR function, the polarization controller (PC) was set as follows. When low power pump signal A and B were inputted in SOA (both bit 0), the polarization state of the transformation output is almost parallel to the transmission axis of the polarizer so that most of the probe light power can go through; when high power pump signal A and B were inputted in SOA (bit 1), change of the probe light polarization state will be caused by the phase difference between the TE and TM so that only a fraction of power can go through the polarizer. Thus the optical logic NOR operation is achieved.

While, the PC can be adjusted to another polarization state to achieve the OR function. When the input signal is bit 0, the polarization state of the transformation output is vertical to the transmission axis of the polarizer; when the output signal is of bit 1, the rotation of the detecting light polarization state will lead to the high intensity of the polarizer output. Thus, with appropriately adjusting the polarization state of detecting light with the PC, NOR and OR logic functions can be achieved.

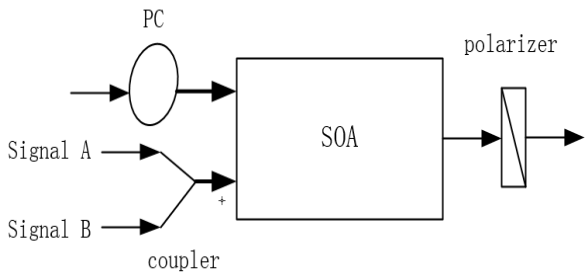

Figure 1. schematic diagram of NOR、OR gate based on SOA's NPR

III. EXPERIMENT

The experimental schematic diagram of NOR、OR gate based on the SOA's NPR is shown in Fig.2 To realize NOR logic gate, first set the signal A, generated by laser 1 with a power of 32 dB, a wavelength of 1553 nm and a polarization angle of 0 deg, an amplitude modulator (AM) is used to generate NRZ pulse sequence:1100. The signal B generated by laser 2, with a power of 19 dB, a wavelength of 1555 nm, a polarization angle of 90 deg, an AM is used to generate NRZ pulse sequence:0110. Then the two signals are combined by a 2×1 power combiner and entered in SOA. The SOA injection current is 220 mA. At the same time, a probe light with a power of 2dB and a wavelength of 1549 nm generated by laser 3 goes through a PC to make its polarization angle 0 deg and then enters in SOA with the two signals A and B synchronously. After the polarization modulation effect of SOA, the change of polarization modulation into intensity modulation by a linear polarizer, and amplified by an erbium-doped fiber amplifier (EDFA), the probe light is filtered by the filter with a center frequency of 1549 nm.

The implementation structure of OR is basically the same, only need to do the following changes. The power of signal A generated by laser 1 is 7 dB and the power of signal B generated by laser 2 is 2 dB. The polarization angle of the PC is 90 deg.

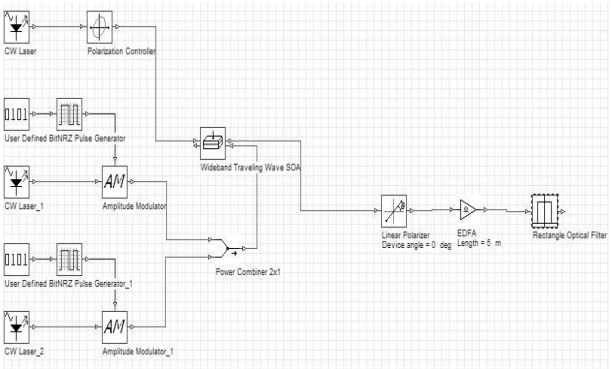

Figure 2. Schematic diagram of experimental set-up

The output is shown in Fig.3. Fig.3 (a) is the input signal A; Fig.3 (b) is the input signal B; Fig.3 (c) is the output of the NOR: 0001; Fig.3 (d) is the output of the OR: 1110. The experiment result is consistent with the theoretical value.

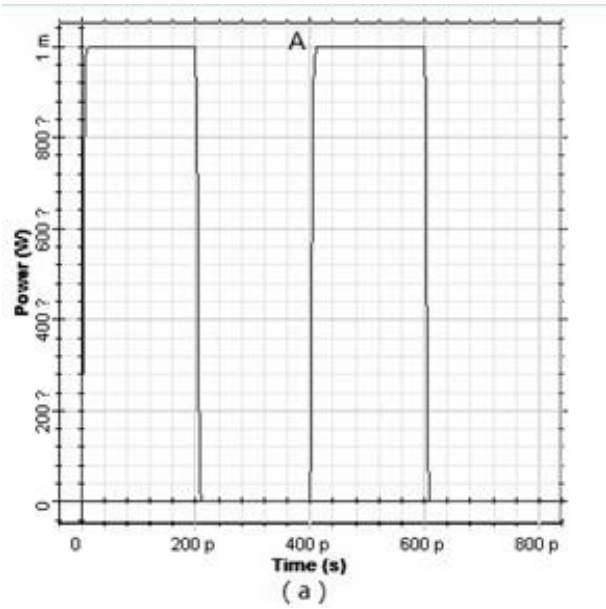

(a) Input signal A

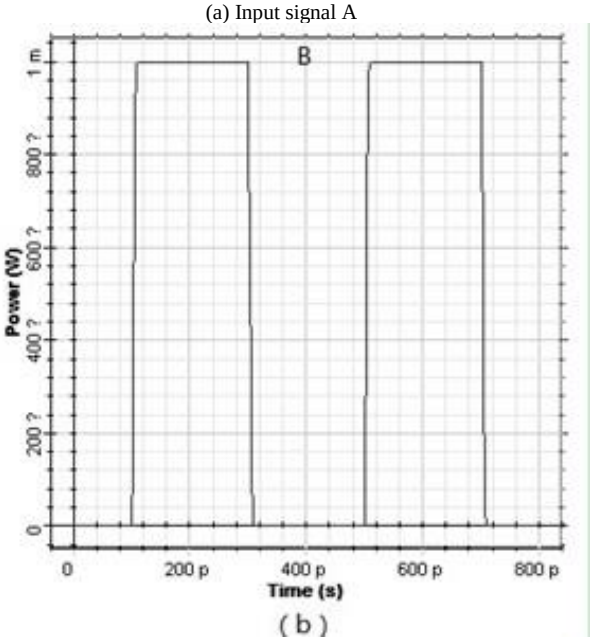

(b) Input signal B

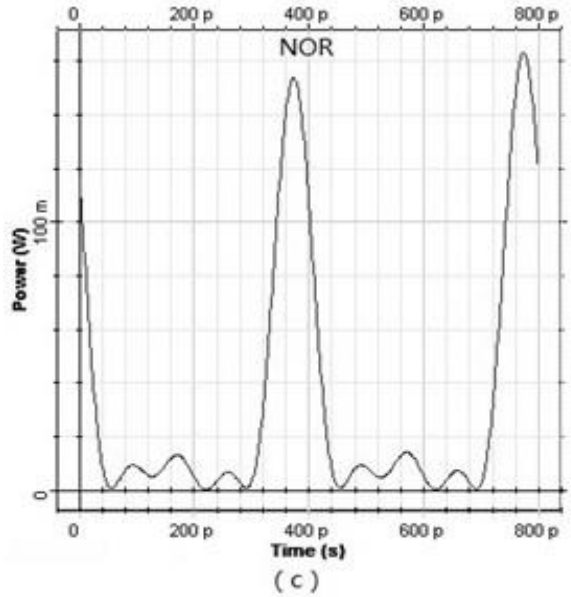

(c) Output signal NOR

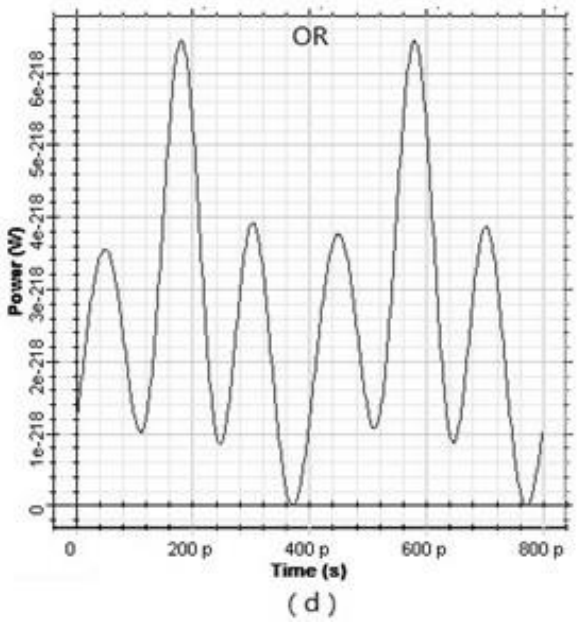

(d) Output signal OR

Figure 3. Experiment results

In this experiment, as signal A, B and the CW go into the SOA synchronously, the existence of cross gain modulation effect is advantageous to realizing NOR logic gate, but disadvantageous to the OR logic gate. Therefore, the output extinction ratio of NOR is higher than OR.

IV. CONCLUSIONS

We have theoretically and simulation experimentally demonstrated a method to implement OR/NOR optical gate based on the nonlinear polarization rotation (NPR) effect of a single Semiconductor optical amplifier (SOA). The SOA was used to change the polarization state of the signal and a polarizer was added at the output end of the SOA to convert polarization modulation into intensity modulation. Both NOR and OR logic functions can be achieved with appropriately adjusting the polarization state of probe light by the polarization controller.

REFERENCES

[1] Nema Elfaramawy,Amira Awad. All-optical Corcuits Based on the the Non-linear Properties of the Semiconductor Optical Amplifier. Photonics Technology Letters, IEEE, 2004, 14(12):270~274

[2] Zhihong Li, Guifan Lil. Reconfigurable all-optical logic gates based on FWM in Semiconductor Optical Amplifier. IEEE PHOTONICS TECHNOLOGY LETTERS, VOL. 18, NO. 12, JUNE 15, 2006: 1041~1135

[3] S. H. Kim, J. H. Kim, B. G. Yu, et al. All-optical NAND gate using cross-gainmodulation in semiconductor optical amplifiers. Electronics Letters, 2005, 41(18): 1027~1028

[4] Y. T. Byun, K. S. Choi, Y. M. Jhon, et al. All-optical OR gate using cross gainmodulation in semiconductor optical amplifier, in: Institute of Electrical andElectronics Engineers Inc., Piscataway, NJ 08855-1331, United States, Munich, Germany: 2005 : 1568271.

[5] X. Zhang, C. Zhao, H. Liu, D. Liu, and D. Huang. Demonstration on All-OpticalLogic AND and NOR Gates at 20Gb/s with cascaded SOAs. 20th Congress of theInternational Commission for Optics. Changchun, 0203-04, 2005.

[6] J. Xu, X. Zhang, J. Dong, et al. Ultrafast all-optical gate based on cascaded SOAs with assistance of optical filters. Electronics Letters, 2007, 43(10): 585~587.

[7] G.L. Papadimitriou. Papazoglou and A.S. Pomportsis, Optical Switching: Switch Fabrics, Techniques, and Architectures, IEEE J. Lightwave Technol, 2003, 21(2): 384-405.

[8] Jourdan, D. Chiaroni, E. Dotaro, et al., The Perspective of Optical Packet Switching in IP-Dominant Backbone and Metropolitan Networks , IEEE Commun. Mag. , 2001 , 39(3):136-141.

[9] Rosnahlizawati Rostam, Mohamad Halim Abd. Wahid, Mohd Farizal Faridus, et al. The Effect of Siganl Repetition Rate, InjectedCurrent and Swithching Windows on Cross-Phase Modulation in SOA-NOLM, RSM2011 Proc., 2011,Kota Kinabalu, Malaysia.

[10] Nan Chi, Jianfeng Zhang, Pablo V. Holm-Nielsen, et al. Transmission and Transparent Wavelength Conversion of an Optically Labeled Signal Using ASK/DPSK Orthogonal Modulation[J].IEEE PHOTONICS TECHNOLOGY LETTERS, VOL. 15, NO. 5, MAY 2003:760-762.