# AMT Fault Information System Based on CAN Bus Gateway

Liu Xianqiang
National Key Laboratory of Vehicle Transmission
Beijing Institute of Technology
Beijing, China
E-mail: liuxq0830@163.com

Liu Haiou
National Key Laboratory of Vehicle Transmission
Beijing Institute of Technology
Beijing, China
E-mail: bit_lho@bit.edu.cn

**Abstract—AMT fault information system based on CAN bus power gateway is designed for the requirements of fault diagnosis in AMT system of vehicle. The functional intergration of data communication in gateway and management of AMT fault data are realized by adding chips of Flash, EEPROM, DS1302, etc. based on the hardware platform of gateway, meanwhile, improving relevant software program. It provides vast analysis data for fault diagnosis and also improves the accuracy of fault diagnosis. The real vehicle test indicates that the system is stable, reliable and practical. This system plays an important role in fault diagnosis of vehicle transmission and data communication of vehicle in motion.**

***Keywords- automated manual transmission(AMT); Flash; fault data; power gateway; CAN bus***

## I. INTRODUCTION

As the automatic mechanical transmission (AMT) has increasingly been used in our country [1-3], and more and more people pay more attention to the function of AMT fault diagnosis. It consists of two components in fixed axis mechanical transmission and automatic control system which is the main part of the realization of controlling and it is an important object of study to fault diagnosis [4]. Fault diagnosis technology of the automatic control system determines the reasons of the fault accurately and quickly, fault location and fault hazardous which have great significances to the reliability and maintainability vehicles and transmission itself and the reliability and maintainability of the vehicle driving safety.

The research based on the platform of a certain AMT heavy off-road vehicles, which is equipped with electronic governor diesel, AMT and the driver terminal system components that share information and coordinate controlling by CAN bus. The CAN bus platform is divided into low-speed and high-speed to improve the reliability and real-time of CAN bus communication, which is connected with the gateway. The gateway is the basic hardware platform in this paper and the fault information system design of automatic control system on CAN bus to meet the requirements of AMT system fault diagnosis.

## II. OVERALL SYSTEM DESIGN

The study of AMT fault diagnosis function is slightly less relative to its control function in current, which can only provide fault code and fault judging accurately that needs to be done by professionals looking up fault diagnosis manual. It is necessary that the fault information has been stored in the form of freeze frame and data streams, when the fault has happened to enhance the accuracy and precision of AMT fault diagnosis and to reduce the difficulty of diagnosis and then design a fault information system.

AMT fault diagnosis needs a wide range of the vehicle operation information. CAN bus gateway as an information exchange hub for vehicle operation, is responsible for the sub-network exchange of information which can be collected into a comprehensive fault information. Therefore, this paper increases AMT fault information system based on the dynamic gateway platform to improve the AMT fault diagnosis capabilities. Meanwhile, data playback and analysis can be realized by the communications of host computer and fault information, which are not only propitious to improve the accuracy of fault diagnosis but also propitious to submise the fundamental reasons of fault based on the data analysis when the fault occurred. Fig .1 shows the AMT fault information system based on the gateway platform.

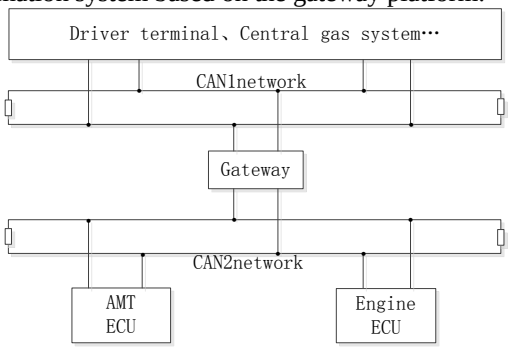


Figure 1. The gateway platform

As shown fig .1, CAN1 network and CAN2 network are low-speed sub-network based on bus and high-speed sub-network respectively. CAN1 network is other vehicle device nodes except engine and AMT electronic-controlled unit. CAN2 connect engine control unit, AMT electronic unit and constituent power system. Therefore, it is also known as dynamic gateway system. When vehicle is in motion, the power system gateway will spread the data of CAN2 bus to CAN1 bus to meet the requirements of the vehicle device for powertrain status data which reflect powertrain response to control commands. Meanwhile, the gateway receives the required data on the powertrain CAN1 bus and sent to the CAN2 bus, thus realizing the

 

powertrain control, and meets the requirements of powertrain for the other equipment data.

Basing on the CAN bus power gateway platform, AMT fault information system has been designed and developed AMT fault information management function to provide a powerful guarantee for vehicle in motion. Fig .2 shows that the overall program block diagram of AMT fault information system based on CAN bus.

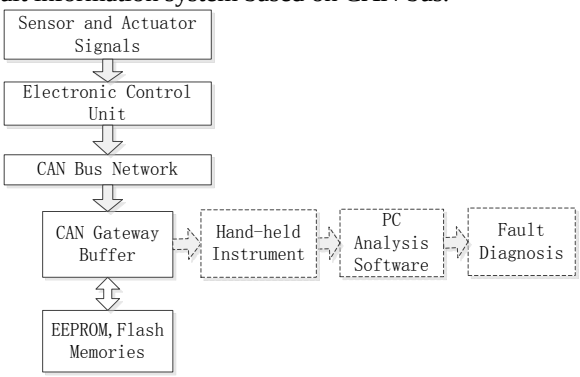


Figure 2. The overall program block diagram

As is shown in fig .2, the operation of the vehicle's sensors and actuators signals transfer to each node of electronic control unit and upload information to the vehicle CAN bus sub-networks, and the CAN gateway to exchange data between CAN networks. Meanwhile, the AMT fault occurs, the system controller will automatically save the vehicle data when the fault occured before three minutes and after three minutes into the Flash. Serial communication can read the saved fault data during the process of troubleshooting. The PC combines with the fault code and fault data for playback and analysis, which can be accurately gotten the fault diagnosis and failure time of vehicle operating conditions to study the reasons for failure in depth.

## III.IMPLEMENTATION OF HARDWARE SYSTEM

As is shown in Fig .3, the gateway electronic control unit selects MC9S12DP512MPVE microcontroller as MCU. The MCU integrates MSCAN, achieves multiple CAN communication. MSCAN module complies to CAN2.0A/B protocol standards, with five FIFO mechanism receiving buffers, three local priority transmit buffer and flexible identifier acceptance mode which can implement global initialization and configuration registers.

The gateway deploys MSCAN0 and MSCAN1 channels to achieve the connection and communication between CAN1 bus and CAN2 bus on MC9S12DP512MPVE as the core controlling unit. In the power supply module, the gateway takes vehicle battery for power, which is reliable power to meet the microcontroller and CAN communication after filtering module and power conversion respectively.

The gateway can respectively achieve the communication functions between CAN1bus and CAN2 bus and AMT fault information management functions by the designing of hardware and software. The system using for heavy off-road vehicle and the operating environment is relatively poor which needs to fully consider the impact of strong vibration, electromagnetic interference, large temperature change and other effects of environmental factors. And the hardware takes the measures as follows.

(1) Selecting feature-rich of Freescale, microcontroller MC9S12DP512MPVE as the core control chip and the controller provides 512KB of Flash memory and 12KB of RAM memory. Meanwhile, chip also integrates MSCAN module, SPI modules, SCI module and timer modules and other rich functional modules, which fully meet the performance requirements of the system and meet the stringent environmental requirements.

(2) Using the CAN interface chip MAX3057 to achieve communication function between systems and CAN bus network, using the MAX232 chip to complete the level switch between the system and a hand-held fault instrument or PC. The system can collect the AMT system fault diagnosis required data by CAN bus, which can sent collected fault data to the PC to display and analysis through serial communication.

(3) Selecting Samsung's NAND Flash chips K9WAG08U1A as the main data storage devices. The chip does not require the motor to accelerate the process of reading and writing, which supports fast random reading and writing, moreover, working noise is very low, fast writing speed, large capacity, etc. that can fully meet the AMT fault data storage requirements.

(4) Data communication and storage systems uses vehicle 24V power supply and converts the 24V supply voltage to 5V by DC-DC converter, providing suitable power for the entire system when the vehicle is stopped and using the battery for the clock chip supply.

(5) The system also uses a clock chip DS1302, EEPROM X5043 chips and other chips, which can record accurate time for collecting data and fault codes and other information.

The system uses the working voltage of microcontroller MC9S12DP512MPVE is 5V and the working voltage of Flash chip is 2.7V ~ 3.6V [5]. Therefore, the system adopts voltage conversion chip 74ALVC164245 which also support two data set. Totally it is bidirectional voltage conversion of 16 data, where each group has 8 data and directional control bit controls the voltage conversion direction and it is needed to modify the direction control bit value dynamically in the process. In order to ensuring system time is accurate, lower machine uses clock chip DS1302, when the system is powered off and the chip is powered by battery. System hardware structure is shown in Fig .3.

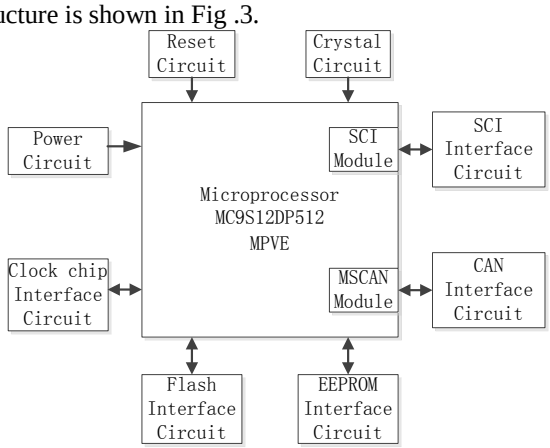


Figure 3. System hardware structure

CAN bus interface circuit adopt the MAX3057chip of DALLAS company as the tansceiver of CAN bus. MAX3057 is the interface between CAN controller and the

physical layer which has the ability of anti-interference and protecting bus. In CAN communication configuration, select 6N137 opto-isolators to meet the requirements of CAN communication rate and to eliminate interferences effectively, while to select MAX3057 as a CAN transceiver and configured RC low-pass filter to reduce high frequency noise. To enhance the anti-enterference ability of CAN bus nodes, controlling the nodes and transceiver do not connect directly and connect with transceiver by opto-coupler which can be realized electric isolation based on CAN bus nodes. Specific hardware circuit is shown in Fig .4.

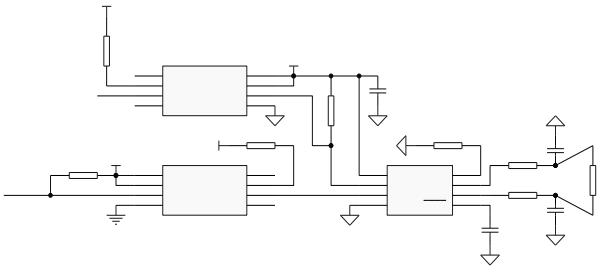

Figure 4. CAN interface circuit design

The working voltage of MC9S12DP512 is 5V, while the working voltage of NAND FLASH chip is 3.3V. Using 74ALVC164245 chip to take level swith between the two above.The elementary diagram of hardware design is shown in Fig .5.

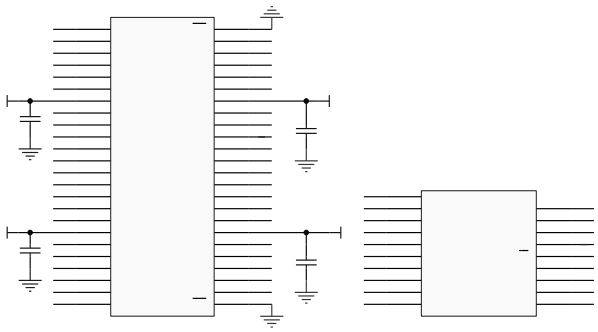

Figure 5. FLASH module circuit design

## IV. INFORMATION MANAGEMENT SYSTEM

Fault diagnosis based on the length of time requirement for fault data to determine the length of the failure data storage 1024KB is eight blocks. The data transmission rate is set 10ms to send 30 bytes, 1024KB nearly six minutes of data can be stored in the data length. AMT fault information stored in the system is responsible for the fault information including fault time, fault codes, owned part of the fault, the fault in flash pages, ideal of fault data for starting address, ideals of fault data for ending address, fault data attribute identifies (fault data integrity, being the fault code of the old fault code is written or not), etc.

AMT fault information system based on the needs of the vehicle and the AMT control system fault diagnosis, fault information stored in the design and Flash EEPROM can store multiple fault codes respectively and the corresponding fault data, Flash page can store 2KB, each fault data storage space required for the 1024KB, but taking into account the half of the stored fault data is occureded before the fault has existed and half is occoured after the fault has existed. Failure time is unknown, therefore, any data in a predetermined time before the occurrence of the fault will be stored, the design of fault codes corresponding to each fault data storage space to open 1024, the actual data fault storage space for 512. With the change in time of failure, the failure address stored in the memory corresponding to the start page and end page change before the start page data will be erased. When a fault occurs, the system will fault codes stored in the EEPROM, data era sure and stop before the start page faults, and the failure to save the data after a certain period of time carried out. Fig .6 shows that the fault one corresponds to fault data storage process.

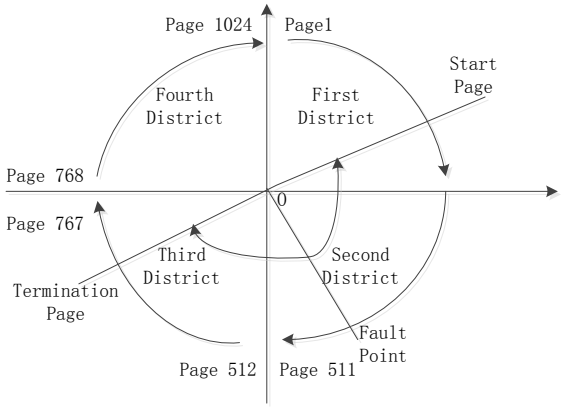


Figure 6. Fault data storage process

AMT fault information system use Samsung's K9WAG08U1A NAND Flash memory chip as the main memory chip failure data, which is based on the concept of pages of storage space and the divided blocks and management. The chip contains a total of 16,384 data blocks, each contains 64 pages, each page has a data area and 64B 2048B spare area, a spare area at the end of the page is mainly used for storing the bad block information, ECC code and other data.

NAND Flash usually uses page as unit to read and to write, when it needs to write a page of data into Flash, the controller send the programming instructions, data memory address and 2KB, Flash chip inside the pages automatically complete the programming operation. In the automatic programming, Flash chip through an internal program to save the data from the data register to the designated storage space, the "R /" "B" port will be pulled low, which means that the chip is in a busy working condition, the process required typical time is 200μs, the maximum time is 700μs[6-8]. Under normal circumstances, the controller needs to wait at the end of Flash internal the page program, which can continue to store data to Flash. The controller needs to wait for the end of Flash chip internal programming each time, which can store the next page. Therefore, a lot of time has been spent in page programming, which largely limits the improvement of system storage. Therefore, it can draw lines technology to improve the page programming speed of NAND Flash [9 ].

## V. IMPLEMENTATION OF SOFTWARE SYSTEM

The system's software program uses C language, which mainly contains data communication, Flash data storage, EEPROM data storage, DS1302 real time clock read other functional modules. Fig .7 is the mechanism diagram of system software.

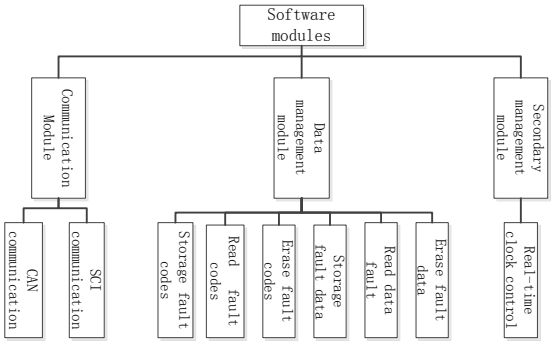


Figure 7. Diagram of system software

As is shown in Fig .7, the software program mainly includes a communication module, fault data management module and auxiliary management module, wherein the communication module has achieved SCI serial communication between CAN communication of the gateway and PC. And secondary management module refers that DS1302 time achieves the recording function of fault time. Fault data management module is an important function module of AMT fault information system which mainly realizes the storage of fault codes and fault dat， reading and erasing function to provide the basic data information for AMT fault diagnosis.

The fault data is mainly collected by the CAN bus. The sampling period of ECU internal setting in AMT system is 10ms and the 29 bytes data has been collected in sampling period. After ECU implements the sampling data, the collected data add a frame synchronization bytes at the beginning, then packages the data of 30 bytes as a data frame, which are sent to lower machine by CAN bus. The system integrates MSCAN module ininglechip, which is CAN bus communication controller in line with CAN2.0A and CAN2.0B protocol defined by the BOSH Company. The microcontroller has achieved its configuration for CAN bus controller by the register setting of MSCAN [10]. When the MSCAN enters initialization mode, it is needed to set MSCAN clock source, baud rate, synchronization jump width, ID filtering parameters. After MSCAN exits initialization mode, it needs to receive the interruption. The MSCAN initialization flow chart is shown in Fig .8.

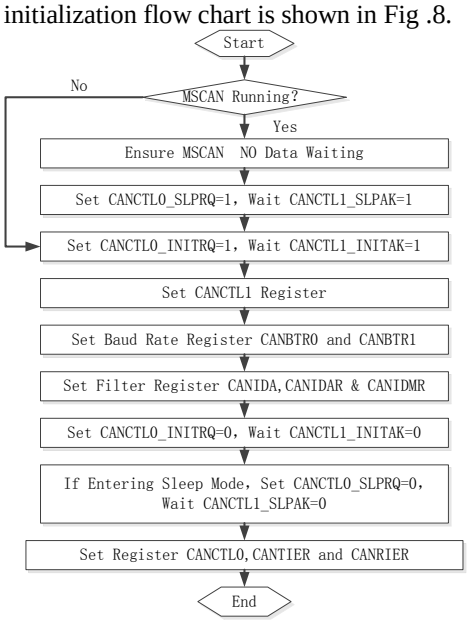


Figure 8. MSCAN initialization flow chart

The system is accomplished data sampling by the timer interruption program and package the sampling data as a data frame in the sampling period and it contains 30 bytes data per frame. The sampling period of the system sets 10ms. The system can send the packaged data frame to PC directly by serial communication program. The baud rate of system setting gateway and the serial communication of PC is 38400. The serial communication program and CAN communication program are implemented the program respectively by sending and receiving interrupt program of the SCI module and MSCAN module. Each interrupt program and main program run in parallel.

Data storage module mainly implements the basic memory function of NAND Flash and the storage function of EEPROM and the EEPROM storage fault codes is relatively simple. Flash basic storage features mainly include: block erasing, page reading, page programming and other functions. NAND Flash erasing sets block as a unit and reading and programming usually set page as a unit. And it must be ensure that the current block has been successfully erased before the page program or the data can't be written correctly.

The microcontroller can be controlled on NAND Flash by a common I / O ports. In the process of access, Flash erasing and reading are automatically achieved by internal program. The microcontroller only needs to send the corresponding control instructions, address and data into Flash's internal registers. Flash programming process is shown in Fig .9, block erasing and page reading process is similar to the above one.

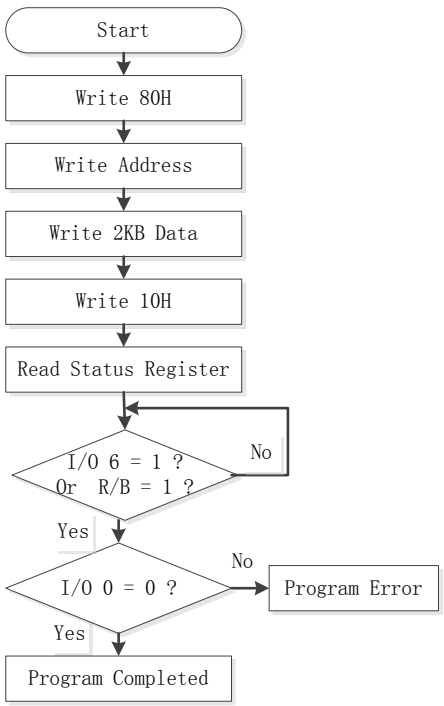


Figure 9. Flash programming process

## VI. SYSTEM VERIFICATION TEST

AMT Fault information system based on CAN gateways has been used in the off-road vehicles of a particular model to record fault information caused by vehicle faults. Fig .10 is a particular fault data which is shown in the data analysis software.

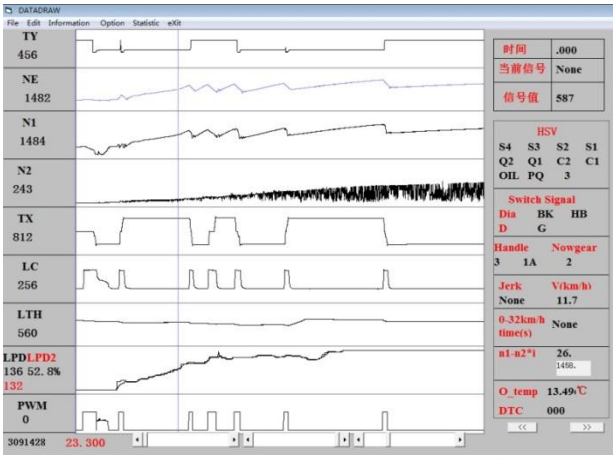

Figure 10. Fault data shown in the data analysis software

Fig .10 is a particular collection of fault data through the file format conversion based on the data communication protocol, as is shown in the PC software. This fault symptom is the vehicle in motion which appears the phenomenon of the road blocking irregularly, the shift can only come to the vehicle shifting is not correct based on the fault code and it can't locate the fault accurately. As is shown in Figure 9, it is analyzed by reading the fault data of AMT fault information system. The data shows that N2 signal is abnormalities. N2 speed sensor signal is abnormalities, which leads the ratio is innormal and this phenomenon occurs frequently, because of N2 signal abnormalities and vehicle speed abnormal beating. Therefore, there are frequent shifting phenomena in motion. Check the N2 speed sensor and find the cable damaged pipe extrusion shield and then find out the point of fault exactly.

## VII. CONCLUSION

This paper designs AMT fault information system based on CAN gateway, analysis of the internal structure based on CAN gateway and the requirements of AMT fault diagnosis to data. And collecting the required data from AMT fault diagnosis based on CAN bus gateway and AMT fault information has been stored in EEPROM and Flash. A large number of utility vehicle tests show that the system hardware is reasonable, reliable, feature-rich software, practical which meets the requirements to fault diagnosis of vehicle speed control system for data acquisition storage.

## REFERENCES

[1] Ding Huarong. Vehicular automatic shift[M]. 2nd ed. Beijing: Beijing In stitute of Technology Press,1992,pp.25-29.

[2] Xi Junqiang, Ding Huarong, Chen Huiyan. The History and Present Status of ASCS and AMT and their Develpoment Trend in China[J]. Automotive Engineering,2002,24(2),pp.89-93.

[3] He Zhongbo,Bai Hongbai.Automatic Mechanical Transmission Technique Development Actuality and Expectation[J].Transactions of the Chinese Society for Agricultural Machinery,2007,38(50, pp.181-186.

[4] Huang Hua, Xi Junqiang, Zhou Shengyan, Xu Minghui.Failure Diagnosis of Pneumatic AMT [J]. Transactions of Beijing Institute of Technology,2009,29(7),pp. 587-591.

[5] Yin Lei. Design and realization of solid storage card based on NAND Flash[J] Journal of Xi ' an University of Architecture & Technology(Natural Science Edition),2012,44(2),pp.300-304.

[6] Zheng Wenjing, Li Mingqiang, Shu Jiwu. Flash Storage Technology [J]. Journal of Computer Research and Development, 2010(40),pp.716-724.

[7] Kgil T, Roberts D, Mudge T. Improving NAND flash based disk caches [C].Proc of the 35th Int Symp on Computer Architecture. New York: ACM, 2008,pp.327-338.

[8] Yoo Y, Lee H, Ryu Y, et al. Page replacement algorithms for NAND flash memory storages [C]. Proc of the 2007 Int Conf on Computer Science and Its Applications. Berlin:Springer, 2007,pp.201-212.

[9] Zhao Juyun, Xhang Jingshuai. Data storage system design based on NAND Flash[J]. Microcontrollers & Embedded Systems, 2012(1), pp.71-73.

[10] Hu Yuhui, Xi Junqiang, Chen Huiyan. Coordination control technology based on CAN bus in process of shifting [J] . Chinese Journal of Mechanical Engineering, 2006, 42(supp): 210-213.