ATLANTIS PRESS

Advances in Engineering Research, volume 190

International Conference of CELSciTech 2019 - Science and Technology track (ICCELST-ST 2019)

Design and Manufacturing of Organic Rankine Cycle (ORC) System Using R-134a as Working Fluid with Solar Collector as Source Energy

Awaludin Martin
Dept. of Mechanical Engineering,
Faculty of Engineering
Riau University
Indonesia
awaludinmartin01@gmail.com

Clinton Naibaho
Dept. of Mechanical Engineering,
Faculty of Engineering
Riau University
Indonesia
clinton22naibaho@gmail.com

Iwan Kurniawan
Dept. of Mechanical Engineering,
Faculty of Engineering
Riau University
Indonesia
iwan.ktm@gmail.com

Romy
Dept. of Mechanical Engineering,
Faculty of Engineering
Riau University
Indonesia
romy_pku@yahoo.com

***Abstract*—Renewable energy sources such as solar heat, wind energy, geothermal, biomass and exhaust heat is one way to overcome the crisis of energy and environment in the world. Organic Rankine Cycle (ORC) is a power generation system modified from Rankine Cycle by using organic liquid with low boiling point as working fluids such as R-134a, therefore various types of heat sources can be use. This research was design and manufacture organic Rankine cycle by using R-134a as working fluid with solar collector as the source of energy. The design of this research resulted in the length of the evaporator tube is 14.5 m, length of condenser is 13.9 m and the length of solar collector tube is 9.4 m. The helical Diameter of evaporator and condenser are 250 mm, and the high of helical evaporator 290 mm and condenser 280 mm. Organic Rankine cycle system is designed to produced 534.4 Watt, but when the experiment is carried out the system generates energy of 305 Watt with the efficiency of 4.30%**

Keywords—Organic Rankine Cycle, Power Generation, Heat Exchangers, Solar Collector

I. INTRODUCTION

Energy has a very important role in human life. Energy is the main support for national economic activities and is used as a tool to achieve social, economic and environmental goals. The rise of new industrial countries such as China and India, the increase in the world's population and, the advancement of science and technology, resulting in energy demand around the world is increasing slowly. Fossil fuels play the role of supplying most of the world's energy in the past century because it is cheap and convenient to use but has a bad impact on the environment such as global warming and acid rain [1].

The use of renewable energy sources such as solar heat, wind energy, geothermal, biomass and exhaust heat is a way to overcome the above issue [2], The sun is one of the inexhaustible sources of free energy for the planet Earth. At this time, technological progress is growing, one of which is to produce electrical energy from solar energy available on earth. This has been proven and can be seen widely throughout the world as a renewable and sustainable alternative. Theoretically, solar energy has the potential to meet the energy needs of the entire world if the technology for harvesting and supplying it is available. Nearly four million exajoules (1 EJ = 10^{18} J) solar energy reaches the earth each year and only about 5×10^4 EJ is claimed to be still being processed. Despite having great potential, the level of awareness of the the role of solar energy to supplies world energy needs is still being ignored [3]. To produce power from solar energy in general there are two methods used: (1) a photovoltaic (PV) system or commonly called a solar cell that is solar radiation energy is directly converted into electrical energy and (2) a solar thermal system where solar energy is used for carry out mechanical work through one of the commonly used power cycles, one of which is the Organic Rankine Cycle (ORC) by the way solar energy is used as a heating medium or heat is converted into work. [4].

Organic Rankine cycles (ORC) have the same work system as Rankine cycles, the difference between ORC and Rankine cycle is in the working fluid used. ORC are using organic liquid with low boiling point as working fluids, therefore various types of heat sources can be use. ORC also has simple structural characteristics, high reliability and easy maintenance [5].

The advantage of using ORC to generate power is that it can use the energy that should be wasted to be useful. Various low-level heat sources such as solar, biomass, engine waste heat, waste heat industry, and geothermal energy can be utilized using ORC. This can significantly reduce thermal pollution and consume fossil fuels [6].

Martin et al also conducted an ORC study where they used waste heat from electric steam power plant was used as a heat source, they built an ORC system with a power of 1 kW and produced an efficiency of 3.33% [7]. The aim of this research is to design and manufacturing an ORC system using R-134a as working fluid with the Solar Collector as an energy source.

II. ORGANIC RANKINE CYCLE

The work system of the ideal Rankine Cycle in the Temperature-entropy diagram (T-s diagram) as shown in figue 1.

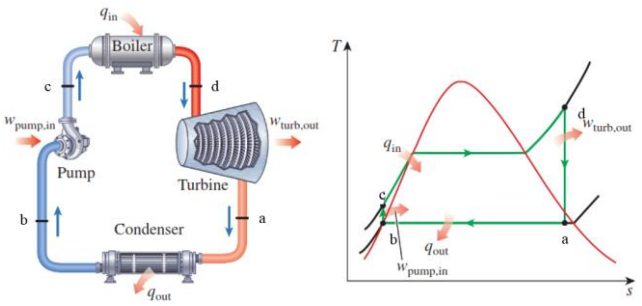

(a) (b)

Figure 1. Rankine Cycle Schematic (a) ; Rankine Cycle T-s Diagram (b)

The working system of the ORC system is shown in Figure 1 and explained below:

Process a-b: heat rejection in a condenser.
Process b-c: Isentropic compression in a pump.
Process c-d: heat addition in a evaporator.
Process d-a: isentropic expansion in a turbine.

There have been many studies about the Rankine cycle as a cycle used for electricity generation used to generate electricity from the sun's heat. The main components of rankine cycle with solar thermal systems are (1) solar collectors, (2) heat energy storage, and (3) Rankine cycles. As shown in Figure 1 [8].

In the Rankine cycle, saturated liquid water is use as a working fluid, which is then heated to saturated steam. This saturated steam flows through a turbine, where the internal energy in saturated steam was convert into mechanical work to run a power generation system. Not all energy can be use due to losses such as friction, viscosity, etc. Most of the heat energy was channel into the condenser. Then the condensed water returns to the boiler.

The heat rejected during condensation of steam in the condenser is channel to a reservoir. Then the heat energy is convert to mechanical motion, or energy, then produces steam pressure at the exit side, which is much lower than the turbine inlet side. Low pressure steam in the turbine at point a is first condensed to liquid at point b and then at point c the liquid pressure is raised in the pump and this high pressure liquid water is then ready to pass through the boiler at point c and be reused. In the Rankine cycle shown in Figure 1. Heat exchangers used are boilers and condensers. Well-designed heat exchangers, hot and cold liquids flow with little pressure loss. Thermal energy from steam into mechanical energy through turbine turns, which runs a generator to produce electrical energy obtained from the Rankine Cycle as a system (Figure 1) [9].

Efficiency thermal of ORC will be determined by equation 1 as follow :

$$\eta_{th} = \frac{w_{net}}{q_{in}} = \frac{w_t - w_p}{q_{in}} = \frac{\dot{m}(h_3 - h_4) - (h_2 - h_1)}{\dot{m}\,(h_3 - h_2)} \qquad (1)$$

III. ORGANIC RANKINE CYCLE WITH SOLAR COLLECTOR

In the organic Rankine cycle with a solar system, the solar collector which acts as an evaporator takes heat energy from the sun to heat the working fluid from the Rankine cycle either directly (Direct Vapor Generation or DVG) and indirectly uses liquid media to conduct heat or Heat Transfer Fluid (HTF). As shown in Figure 2.

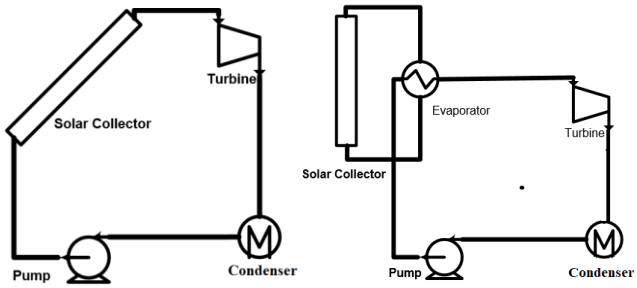

(a) (b)

Figure 2. Direct Vapor Generation (DVG) (a) and Heat Transfer Fluid (HTF) (b)

Most ORC systems with Solar Collector use the HTF system to heat up the working fluid of the ORC. Direct evaporation of working fluid is one of the problems in solar collectors and the way to avoid it is to use HTF technology and if needed this technology can also be used for combining with thermal energy storage systems, however, irreversible HTF in the evaporator is very large. At certain pinpoint temperatures (ΔTPP), if the higher the mass flow rate is HTF, the higher the HTF output temperature. On the other hand, if the HTF mass flow rate is lower, the higher the HTF inlet temperature. So it is hard to reduce the mean temperature of HTF which results in the operation of solar collectors it causes a loss that is efficient reduction at high temperatures rather than operating at low temperatures [10].

On the other hand, DVG technology has several advantages, namely (1) high efficiency can be obtained by increasing the evaporation temperature (2) having low thermal inertia, compared to HTF systems, which reflects the fast start of the system but, which includes DVG disadvantage is a system that has a high sensitivity to the environment that each alternating bright and cloudy period experiences fluctuations in evaporation temperature, which is reflected in the steam flow rate entering the turbine resulting turbine speed have fluctuations[11].

IV. METHODOLOGY

This method is carried out for the design, manufacture and testing of ORC systems. In this design, there is a scheme or description of the ORC system design that will be made as shown in Figure 3:

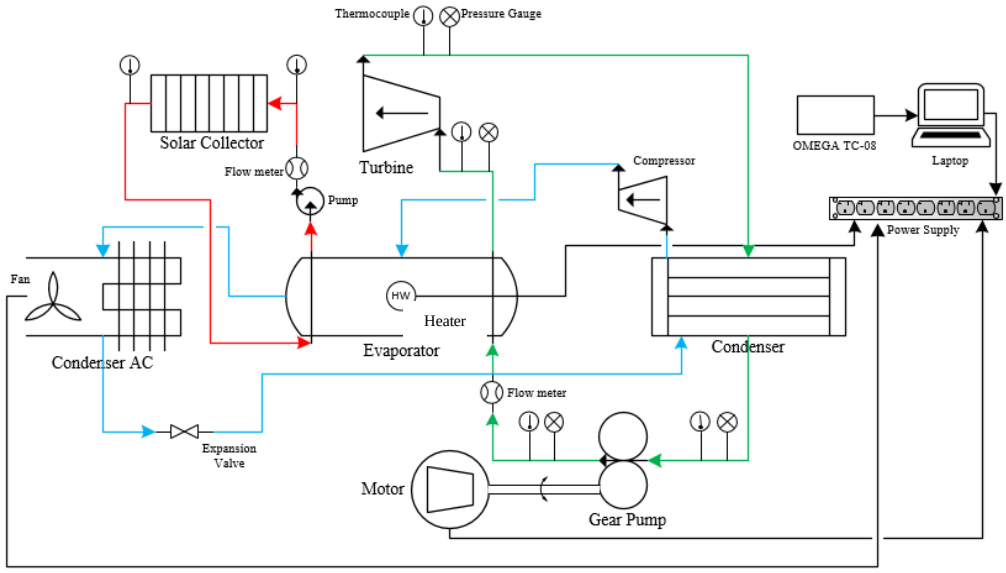

Figure 3. Schematic of ORC System with Solar Collector

The experiment procedure to running the ORC system as follows;

a. The temperature controller on the evaporator and condenser is turned on and the temperature limit is set,

b. The air conditioning (AC) system is turned on to cool the water in the condenser,

c. The solar collector system water pump is turned on so that it flows in the system and heat the water in the evaporator,

d. R134a working fluid is introduced into the ORC system to a pressure of 5 bar,

e. After the heating water and cooling water reach the desired temperature, the OMEGA USB TC-08 was connect to the computer until the connected indicator light turns on. The thermocouple sensor on the OMEGA TC-08 at each point is set to read the temperature correctly.

f. During the test, the pressure reads on the pressure gauge at each test point and the fluid flowing to the flowmeter is recorded,

g. After testing is complete, the electric motor, AC system and temperature controller was turn off.

In the figure 3 it was consists of three cycles, namely the Organic Rankine Cycle which is shown by a green line, the refrigeration cycle is indicated by a blue line and the Solar Collector cycle is indicated by a red line.

In the ORC cycle, each stage is given a pressure gauge (0–50 bar) and Thermocouple type K which is useful to determine the pressure and temperature of the working fluid when the system is operated, except for the solar collector that only Thermocouple provides, which can be used as data for later analysis and to measure the mass flow rate of the working fluid is given a flowmeter.

V. Parameter Design

In design of heat exchangers (evaporators, condensers and solar collector) using equations derived from Yunus Cengel [12] as below:

To determine value of Qh and Qc on the evaporator and condenser

$$Q_h = Q_c = m.\Delta h \tag{2}$$

To calculate ΔT_{lm}

$$\Delta T_{lm} = \frac{\Delta T_1 - \Delta T_2}{\ln(\frac{\Delta T_1}{\Delta T_2})} \tag{3}$$

To found Surface Area (As) we use

$$Q_c = U.A_s.\Delta T_{lm} \tag{4}$$

Then

$$A_s = \frac{Q}{U.\Delta T_{lm}} \tag{5}$$

To calculate long Tube (L) temporarily

$$L = \frac{A_s}{\pi.D_o} \tag{6}$$

To determine the value of $\rho_{mix}, k_{mix}, \mu_{mix}, Pr$ for refrigerant R-134a.

Because during the evaporation process, flowing fluid changes phase so that it is not fully fluid in liquid or vapor conditions, the values are searched for mixed conditions/ conditions, namely by:

$$\rho_{mix} = \frac{\rho \text{ In Liquid Phase} + \rho \text{ in Gas Phase}}{2} \tag{7}$$

For the value of thermal conductivity, Prandtl number, and dynamic viscosity using the same method as the above equation, the value is obtained using REFROP version 8.0 and the interpolation method,

To calculate the value of ρ_f, k_f, μ_f, Pr we used

$$T_{ave} = \frac{T_{h,i} + T_{h,o}}{2} \tag{8}$$

To found the velocity value of fluid flow

$$V = \frac{\dot{m}_h}{\rho_f . A} \quad (9)$$

Then the value of Reynold Numbers

$$Re, = \frac{\rho V D_o}{\mu} \quad (10)$$

To found the Nusselt Number value

$$Nu = 0.027 \times Re^{0.805} Pr^{1/3} \quad (11)$$

To calculate convection coefficient inner and outer

$$h = \frac{k}{D} Nu \quad (12)$$

To determine Thermal Resistance (R) and Overall heat transfer coeficient (U)

$$R = \frac{1}{h_i A_i} + \frac{R_{f,i}}{A_i} + \frac{\ln(Do/Di)}{2\pi k L} + \frac{R_{f,o}}{A_o} + \frac{1}{h_o A_o} \quad (13)$$

$$U = \frac{1}{R} \quad (14)$$

And finally the value of the total area (A) and the total length of the evaporator (L).

$$A_{total} = \frac{Q}{U.\Delta T_{lm}} \quad (15)$$

$$L_{total} = \frac{A}{\pi D} \quad (16)$$

VI. Result And Discussion

In designing the organic Rankine cycle system with this solar collector using software cycle tempo as the basis for the design and the following results are obtain:

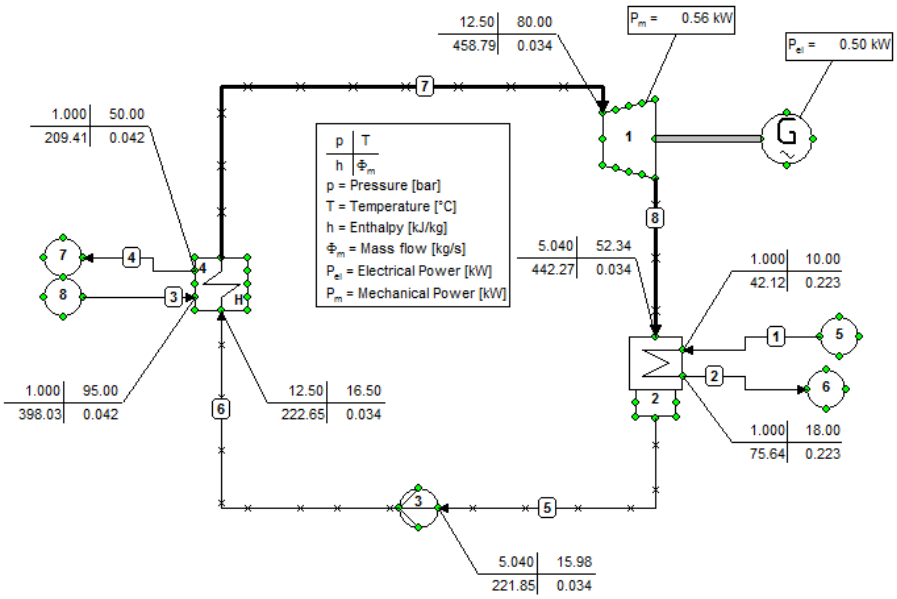

Figure 4. The results of design using Cycle Tempo

In this design, the first thing to do is determine the design parameters of the system. The following describes the parameters for designing an ORC system based on data from Cycle Tempo (figure 4):

Design Parameters:
Generator Power: 560 W
Working Fluid: R-134a
Outside Diameter = 0.009525 m
Inside Diameter = 0,007525 m
U: 300 W / m2, °C
Fouling factor resistance, inner: 0.0002 m^2.°C/W
Fouling factor resistance, outer: 0.0004 m^2.°C/W
Thermal Conductivity (k) copper: 385 W/m°C
Flow type Counter Flow - Shell and tube Heat Exchanger - Helical Tube

After the design and calculation, the results are obtain in table 1 for the evaporator and condenser, in table 2 for the solar collector.

Table 1 Evaporator and Condenser Design Specification

	Evaporator	**Condenser**
Tube Lenght	14,5 m	13,9 m
Helical Diameter	250 mm	250 mm
Pitch	5 mm	5 mm
Revolution	19,5	18,5
Helical Height	290 mm	280 mm

Table 2 Solar Collector Design Specification

	Solar Collector
Tube length	9,4 m
Box length	1128 mm
Box Width	1000 mm
Box Height	115 mm
Distance Between Tubes	110 mm
Inside Diameter	8,525 mm
Outside Diameter	9,525 mm

Organic Rankine cycle system with solar collector as source energy is show in figure 5.

Figure 5. Organic rankine cycle system with solar collector

Inside Solar Collector the initial temperature of the water on the evaporator is 27˚C then the water pump is turned on and then silenced, the data is taken from 11 am – 1 pm based on the test data the water temperature increases and has the highest temperature at 52.3˚C, this temperature does not reach the desired temperature of 95˚C, because at the time of designing, the weather conditions were normal, but at the time of the experiment the weather conditions were not very supportive, therefore, to reach the desired temperature a heater was used during the experiment. this heater will later be connected to the control temperature to be able to control the desired temperature.

It is known from the calculation that at a temperature of 95ºC, the solar collector is able to contribute an energy of 37.13% of the total energy needed, so that the energy that can be saved or renewable energy sources is 37.13% of the total heat available in the heat source.

Table 3 Comparison of Energy Analysis between Design and Experiment

	Design	**Experiment**
Mass Flow Rate	0,034 kg/s	0,035 kg/s
Turbine Power	0,560 kJ/s	0,578 kJ/s
Pump Power	0,027 kJ/s	0,273 kJ/s
Heat in	236,1 kJ/kg	202 kJ/kg
Net Work	0,5344 kJ/s	0,305 kJ/s
System Efficiency	6,65 %	4,30 %

There is a difference between design and experiment because in the design all conditions are stable, little energy loss, little flow loss, stable working temperature, but when the experiment is very difficult to keep the working temperature stable due to a fairly large loss of energy.

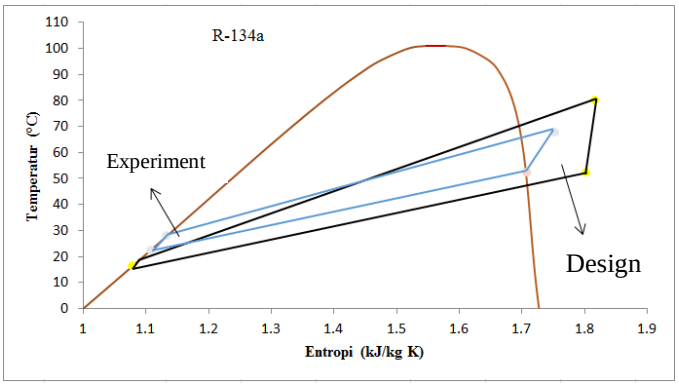

Figure 6. Comparison of Experiment and Design

It can be seen in table 3 and figure 6 the difference between the results of design and experiment. The efficiency obtained in the experiment is 4.3% and this is different from the efficiency of the ORC system that is designed at 6.65%, this is due to the difference in temperature between design and experiment. The evaporation temperature in the evaporator in the design is higher than the evaporation temperature in the evaporator in the experiment, it causes the efficiency in the design results is higher than the efficiency in the experiment. This is because the turbine operating conditions in the design are higher than the turbine operating conditions in the experiment, this is also in accordance with research conducted by Wei Liu in which if the temperature is lower in the pump area and the higher temperature in the turbine area will improve the performance of the ORC system [13].

VII. Conclusion

Design and manufacturing of Organic Rankine Cycle (ORC) with solar collector as energy source, has been carried out and resulted in the length of the evaporator tube is 14.5 m, length of condenser is 13.9 m and the length of solar collector tube is 9.4 m. The helical Diameter of evaporator and condenser are 250 mm, and the high of helical evaporator 290 mm and condenser 280 mm. Organic Rankine cycle system is designed to produced 534.4 Watt, but when the experiment is carried out the system generates energy of 305 Watt with the efficiency of 4.30%.

Acknowledgment

The author is very grateful for the financial support provided by University of Riau Under “SKIM Unggulan Universitas Tahun Anggaran 2019 (No.955/UN. 19.5.1.3/PT.01.03/2019)” with a title “Design And Manufacturing Of Organic Rankine Cycle (ORC) System Using R-134a As Working Fluid And Solar Collector As Source Energy”.

References

[1] Aboelwafa, Omar, Seif-Eddeen K.Fateen, Ahmed Soliman, Ibrahim M.Ismail. 2017. “A Review On Solar Rankine Cycles: Working fluids, Applications, And Cycle Modifications”. *Renewable and Sustainable Energy Reviews*. 82 (2018) 868–885.

[2] IEA (2014), *Energy Technology Perspectives 2014*, IEA, Paris,

[3] Kabir, Ehsanul, Pawan Kumar, Sandeep Kumar, Adedeji A. Adelodun, Ki-Hyun Kim. 2018. “Solar Energy: Potential And Future

Prospects". Renewable and Sustainable Energy Reviews, 82 (2018) 894–900.

[4] Twomey, B, P.A. Jacobs, H. Gurgenci. 2013." Dynamic Performance Estimation Of Small-Scale Solar Cogeneration With An *Organic Rankine Cycle* Using A Scroll Expander". *Applied Thermal Engineering*. (51)1307-1316.

[5] Bao, Junjiang, Li Zhao. 2013. "A Review Of Working fluid And Expander Selections For Organic Rankine Cycle", *Renewable and Sustainable Energy Reviews*, 24 (2013) 325–342

[6] Dutta, Shilpi Pratim, Dr. Ramesh Chandra Borah. 2018. "Design of a Solar *Organic Rankine Cycle* Prototype for 1 kW Power Output". Jurnal. (6) 23-33.

[7] Martin, A, Romy, D Agustina, A M Ibra. 2019. "Design and Manufacturing of *Organic Rankine Cycle* (ORC) System Using Working Fluid R-134a with Helical Evaporator and Condenser". IOP Conf. *Series: Materials Science and* Engineering 539 (2019) 012027.

[8] Tian Y, Zhao CY. 2013. "A Review Of *Solar Collector*s And Thermal Energy Storage In Solar Thermal Applications". Appl Energy 2013;104:538–553.

[9] Kapooria, R K, S Kumar, K S Kasana. 2008. "An Analysis Of A Thermal Power Plant Working On A Rankine Cycle: A Theoretical Investigation". Journal of Energy in Southern Africa, Vol 19 No 1.

[10] Jing Li, Jahan Zeb Alvi, Gang Pei, Jie Ji, Pengcheng Li, Huide Fu. 2015. "Effect of Working Fluids on The Performance of A Novel Direct Vapor Generation Solar *Organic Rankine Cycle* System". Applied Thermal Engineering, 98 (2016) 786–797.

[11] Marion, Michael, Ionut Voicu, Anne-Lise Tiffonnet. 2014. "Wind Effect On The Performance Of A Solar *Organic Rankine Cycle*". *Renewable Energy*, 68 (2014) 651-661.

[12] Y. A. Cengel and M. Boles, *Thermodynamics An Engineering Aproach*, 5th Intern. McGraw-Hill, 2006.

[13] Liu, Wei, Xiaoyun Zhang, Ningbo Zhao, Chunying Shu Shanke Zhang, ZhengjunMa, Jun Han. 2018. "Performance Analysis Of Organic Rankine Cycle Power Generation System For Intercooled Cycle Gas Turbine". Advances in Mechanical Engineering 2018, Vol. 10(8) 1–12.