ATLANTIS PRESS
Atlantis Highlights in Material Sciences and Technology (AHMST), volume 1
International Symposium "Engineering and Earth Sciences: Applied and Fundamental Research" (ISEES 2019)

Mathematical Modeling of Oil Reservoir Heating by Electromagnetic-Acoustic Field in Laboratory Conditions

Izmaylova G.R.
Department of Information Technologies, Mathematics and Natural Sciences
Ufa State Petroleum Technological University,
Branch of the University in the City of Oktyabrsky
Oktyabrsky, Republic of Bashkortostan, Russia
gulena-86@mail.ru

***Abstract* — This paper describes an experiment to study the combined effects of high-frequency electromagnetic and acoustic fields on the oil reservoir model. A mathematical model describing the physical processes occurring in the reservoir is given. By introducing an additional term, the heat conduction equation takes into account heat exchange with the environment. The similarity of the theoretical curves and experimental points does not exceed 28%. The qualitative coincidence of the theoretical and experimental curves indicates the adequacy of the mathematical model.**

Keywords — high-frequency electromagnetic field; heat sources; thermoacoustic effect; heat conductivity; reservoir model; temperature field.

I. INTRODUCTION

Recently there has been considerable interest in the search for and development of unconventional hydrocarbons types - petroleum bitumen, gas hydrates, oil shale and ozocerite. They have significant reserves and are an energy and resource alternative to oil and gas. Natural bitumen contains a significant amount of valuable metals and compounds. In reservoir conditions, these substances, as a rule, completely fill the pore space and are in a solid — crystalline or amorphous state. Therefore, their extraction by methods known in the practice of oil and gas production is impossible. It is of interest to search for fundamentally new methods for extracting hydrocarbons from productive rocks in ground conditions and creating methods for their well production. One of such methods might be the use of electromagnetic energy combined with an acoustic field. This method has a number of fundamental characteristics. Energy affects the reservoir through high-frequency electromagnetic and acoustic waves, and not through hydrodynamic and thermal methods, as in traditional methods of oil and gas production. Energy and force interactions of electromagnetic and acoustic waves with the reservoir cause the occurrence of heat sources distributed over the reservoir volume, ponderomotive forces, as well as physical and chemical surface phenomena, electrocapillary and electro-surface effects that can be used in mining technology.

Numerous studies of high-frequency electromagnetic fields show that electromagnetic waves propagating in saturated porous media create volumetric heat sources, due to which it is possible to create conditions for heating an oil reservoir [1-3]. If the electromagnetic field is combined with an acoustic field, a number of interesting effects will appear, such as: thermoacoustic effect, increase in thermal conductivity, change in fluid structure and, as a consequence, change in viscosity and other cross-effects. In addition, the acoustic field is also absorbed by the saturated porous medium and creates volumetric heat sources in it.

The influence mechanism of the electromagnetic and acoustic fields on the reservoir is determined mainly by its electrophysical characteristics and is based on the features of thermo- and hydrodynamic processes arising from the interaction of high-power HF electromagnetic fields with high molecular polar components of saturating oil [4-5]. Consequently, this method is more applicable in the extraction and preparation of heavy oils, whose share in the total balance of oil production is increasing every year.

Thus, the study of the combined effects of high-frequency electromagnetic and acoustic fields on the oil reservoir is of practical and theoretical interest.

II. DESCRIPTION OF LABORATORY UNIT

To establish the main quantitative and qualitative features of the combined effect of high-frequency electromagnetic and acoustic fields on saturated porous media experimental studies were carried out in the laboratory by Sayakhov F.L., Dyblenko V.P., Kuznetsov O.L. and others [6, 7]. For an experimental study, a unit was created (Fig. 1), which allows one to study the features of thermal phenomena in a saturated porous medium under the combined effect of HF and acoustic fields.

The unit included a three-layer reservoir model, a well, with acoustic and electromagnetic emitters placed in it, as well as a ground-based ultrasonic generator GUZ-1.5H (GZ-34 with amplifier TU-600) and a generator of high-frequency electromagnetic waves HFD-2.5. The reservoir model is a block

of natural tar sands from Shugurovskoye bitumen deposit with a thickness of 0.7 m and a radius of 0.6 m, located between 0.15 m layers of wet clay and enclosed in a wooden casing with dimensions 1.4m*1.4m*1.4 m. Quartz sand fractions 0.1 ÷ 0.4 mm is placed between productive layer and a casing. A dielectric tube with a diameter of 4.2 cm is placed along the axis of the formation model.

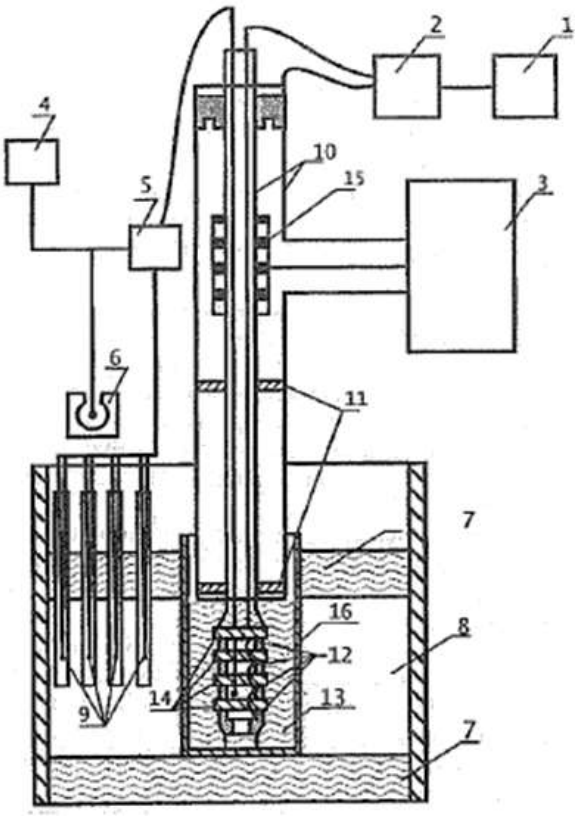

Fig. 1. Experimental unit for the study of high-frequency electromagnetic-acoustic effects used in the work [10]: 1 –ultrasonic generator GUZ-1.5H; 2 – high-pass filter; 3 – generator of high-frequency electromagnetic waves HFD-2.5/13; 4 – microvoltmeter B2-15; 5 – multi-contact switch; 6 – Dewar's flask; 7 – upper and lower contacts; 8 – a model of productive layer; 9 – thermocouples; 10 – aluminum tubes; 11 – dielectric washers; 12, 14 – high-frequency electromagnetic-acoustic energy emitters; 13 – fluid; 15 – coupling capacitor; 16 – dielectric tubes..

One of the main elements of the installation is a technological device for the joint input of energy from the electromagnetic and acoustic fields into the layer. For this purpose there are two emitters (electromagnetic and acoustic) located in the well model. The reservoir had the following characteristics: bitumen saturation - 10 wt. %; water saturation - 0.5 wt. %; porosity - 40 wt. % The type of bitumen that saturates it is Malta with a density of 1024 kg / m3; viscosity at 298 K - 630 Pa·s. For the evaluated estimates, the dielectric characteristics of the reservoir model at the operating frequency f=13.56 MHz were measured: dielectric constant ε'=7.6; dielectric loss tangent tgδ = 0.1 ÷ 0.12.

The reservoir temperature was measured using copper-constantan thermocouples connected via a multi-contact switch to the instrument of direct current B2-I5. The ICP-2.5/HFP-2,5 unit with a maximum oscillating power of 2.5 kW and an operating frequency of 13.56 MHz was used as a source of high-frequency electromagnetic energy [7].

The methodology of the experiment was as follows:

1) registration of the space-time distribution of the temperature field in the model of the bottomhole formation zone with electromagnetic heating of 0.5 kW and a frequency of 13.56 MHz;

2) carrying out similar measurements with simultaneous HF heating of the same power, frequency and acoustic effect with an intensity of 0.9 kW/cm^2 for two frequency values 16 kHz and 6 kHz;

3) carrying out similar measurements with only acoustic effects of the same intensity and frequencies.

A total of 15 experiments were conducted. The results of experimental studies are shown in Table 1 [7].

TABLE I. DISTRIBUTION OF TEMPERATURE IN THE SAMPLE WITH FREQUENCY OF ACOUSTIC VIBRATIONS 6 AND 16 KHZ

Frequency, kHz	Time, hours.	Distance from the emitter, cm			
		4	*14*	*21*	*37*
6	**0**	25	25	25	25
	3	31	25	25	25
	5	31	25	25	25
	8	31,5	25	25	25
16	**0**	27	27	27	27
	3	37,5	28	27	27
	5	40	30	27	27
	8	42,5	30,5	27	27

From the data presented in Table 1, it follows that the acoustic effect causes an increase in the efficiency of electromagnetic heating of the bottomhole zone model of the bitumen formation. The rate of electromagnetic heating in the acoustic field increases. The increase in the heating rate in the medium grows with an increase in the acoustic field frequency (Table 1). Moreover, with the distance from the emitter, the influence of the acoustic field on the rate of temperature change becomes smaller. This is explained by the fact that with increasing radius the energy of the acoustic field decreases.

The spatial distribution of temperature given in table 1 shows the increase in the depth of high-frequency electromagnetic heating in an acoustic field. Moreover, the depth of heating with the use of an acoustic field of a frequency of 16 kHz is higher than the frequency of 6 kHz with the same intensities of acoustic effects [8, 9]. The change in the spatial-temporal temperature field distribution in the model of the bitumen layer bottomhole zone can be explained by the fact that when the acoustically affecting the bituminous sandstone increases its effective heat conductivity coefficient. This leads to an increase in the dependence of electromagnetic heating on thermal diffusivity and to an increase in its

contribution to the temperature distribution during electromagnetic heating.

III. THEORETICAL JUSTIFICATION OF THE EXPERIMENT

Comparative design studies of the reservoir model heating with the energy of electromagnetic and acoustic waves were carried out with the experimental data given in Table. 1. In the experiments, two values of the acoustic waves frequency were used: f_a=6 kHz and 16 kHz, the acoustic emitter intensity was 900 W/m^2. The power of electromagnetic waves was 0.5 kW. The thickness of the reservoir model is 0.7 m; therefore, it is advisable to take into account in the heat conduction equation the outflow of heat into the environment. Thus, the heat conduction equation describing the temperature change over time and in space in the reservoir model with high-frequency electromagnetic-acoustic heating has the form:

$$\frac{\partial T}{\partial t} = \frac{1}{C_p r}\frac{\partial}{\partial r}\left(r\lambda_a \frac{\partial T}{\partial r}\right) + \frac{F}{C_p} + \frac{q_{aэ}}{C_p}, \qquad (1)$$

$$F = \gamma\left[\frac{T - T_н}{\sqrt{t}} + \sqrt{t}\frac{\partial T}{\partial t}\right]; \quad \gamma = -\frac{2c_0\rho_0}{h}\sqrt{\frac{a_0}{\pi}}$$

where λ_a – the reservoir' heat conductivity coefficient; C_p – the volumetric heat capacity of the reservoir rocks, $q_{aэ}$ is the total heat sources h is the reservoir thickness, c_0 – the heat capacity of the reservoir model, ρ_0 – the reservoir model density, a_0 is the thermal diffusivity of the reservoir model.

Total volumetric heat sources in the medium arising from the effects of EM and acoustic field can be presented as:

$$q_{aэ} = q_a + q_э, \qquad (2)$$

Where $q_э$ and q_a are determined by equations:

$$q_э = \frac{\alpha_э N_{э0} e^{-2\alpha_э (r - r_0)}}{\pi r h},$$

$$q_a = \alpha_a N_{a0}\frac{\exp(-\alpha_a (r - r_0)}{2\pi r h}, \qquad (3)$$

where α_a, $\alpha_э$ – EM and acoustic waves attenuation coefficients; r_0 – well radius; N_{a0} –acoustic waves emitter power; $N_{э0}$ – EM waves emitter power.

Boundary conditions used in calculations. At the initial time, the reservoir temperature in all points is the same:

$$T(r,0) = T_н. \qquad (4)$$

Interface conditions at the well downhall and at the reservoir boundary are:

$$\left.\frac{\partial T(r_0,t)}{\partial r}\right|_{r_0 \to 0} = 0; \quad \frac{\partial T(r_k,t)}{\partial r} = 0. \qquad (5)$$

Here r_k – reservoir model radius; $T_н$, T – initial and current temperatures respectively.

The maximum relative error between the calculated curves and experimental points for the case of HF EM acoustic heating with a frequency f_a=16 kHz is 20%, for the case of HF EM acoustic heating with a frequency f_a=6 kHz - 28%. Moreover, the relative error grows with increasing distance from the emitter, which indicates the ongoing heat exchange on the wall of the reservoir model with the environment.

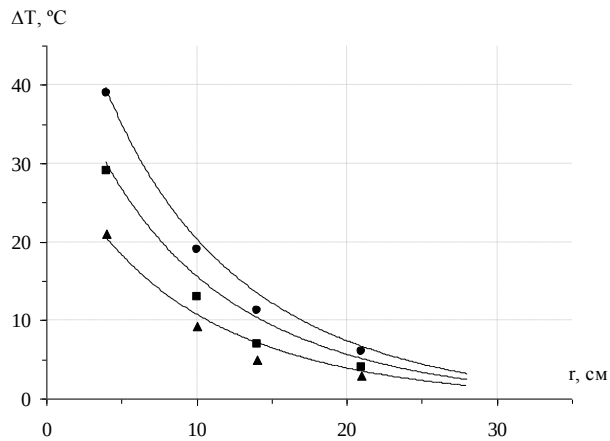

Fig. 2. The distribution of the reservoir model temperature field after high-frequency electromagnetic-acoustic heating for t=8 hours. 1 – f_a = 16 kHz, 2 – f_a = 6 6 kHz, 3 - HF EM heating. ● – f_a = 16 kHz (experiment), ■ – f_a = 6 kHz (experiment), ▲ – HF EM heating (experiment).

Fig. 3 shows the temperature dynamics curves located at a distance of 0.04 m from the well radius, obtained by calculation and experimentally. The maximum relative error between the calculated curves and experimental points for the case of high-frequency electromagnetic-acoustic heating with a frequency of f_a=16 kHz is 28%, for the case of high-frequency electromagnetic-acoustic heating with a frequency of f_a=6 kHz - 18%. The discrepancy between the curves decreases with increasing exposure time [7].

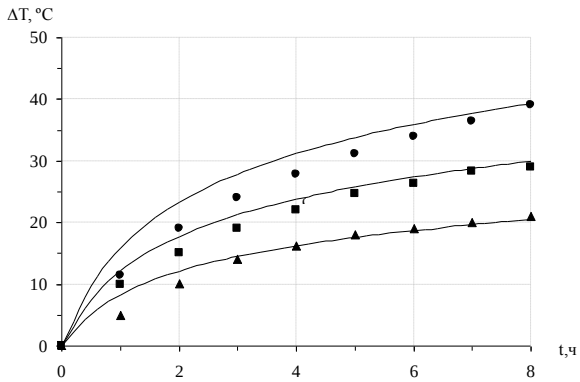

Fig. 3. Dependence of temperature and time with HF EM-acoustic effects at r = 0,04 м. 1 – f_a = 16 kHz, 2 – f_a = 6 6 kHz, 3 - HF EM heating. ● – f_a = 16 kHz (experiment), ■ – f_a = 6 kHz (experiment), ▲ – HF EM heating (experiment).

It is necessary to note the possible contribution to the effect of intensification of high-frequency electromagnetic heating from the combination of a heated bitumen viscosity decrease in the acoustic field and its filtration motions caused by a drop in the acoustic impulse. An increase in the heating temperature with an increase in the acoustic field frequency can be explained. An increase in the heating intensity of a saturated

porous medium with increasing frequency is related to the increaseing fluid "turbulization" in the pores [10].

IV. Results

The results of experimental studies suggest that near the emitter the temperature gradient with electromagnetic heating decreases if a source of sufficiently intense acoustic waves acts simultaneously. This circumstance leads to a decrease in temperature near the well and to its increase of it in a distance from the well. In practice, this causes an increase of the heat-affected zone.

Comparison of computational and experimental studies, taking into account the influence of measurement errors (non-observance of the high-frequency electromagnetic waves waveguide effect in the reservoir model, heat exchange with the environment) showed that the developed mathematical model can be used for predictive calculations of the combined effect of high-frequency electromagnetic and acoustic fields on the oil reservoir.

V. Conclusion

Thus, the conducted studies show the real possibility of applying the combined methods of exposure to high-frequency electromagnetic field and acoustic on the reservoirs of highly viscous oils and bitumens in order to intensify the fluid flow to the well and increase oil recovery.

It is of practical interest later to study the effect of the acoustic effects of various frequencies in combination with an electromagnetic field.

Acknowledgment

I want to thank my scientific adviser Nasyrov Nur Mugatabarovich for help with the calculations and valuable advice, and thank my scientific supervisor Kovaleva Liana Aronovna for the most important comments on the article topic.

References

[1] S.V. Volodin, V.L. Dmitriev, I.G. Khusainov, "The propagation of linear waves in humid, gas-saturated media", High Temperature, vol. 47, no. 5, pp. 701–706, 2009.

[2] M.A. Fatykhov, N.Ya. Bagautdinov, "Experimental investigations of decomposition of gas hydrate in a pipe under the impact of a microwave electromagnetic field", High Temperature, vol. 43, no. 4, pp. 614–619, 2005.

[3] M.A. Fatykhov, "Filtration of a high-viscosity oil in an electromagnetic field", Journal of Engineering Physics and Thermophysics, 2004, vol. 77, no. 2, pp. 260–265.

[4] V.P. Dyblenko, B.C. Evchenko, S.N. Solonitsin, O.L. Kuznetsov, G.H. Gabitov, Y.V. Lukianov, I.M. Nazmiev, "Enhanced oil recovery of reservoirs with hard-to-recover reserves using physical methods in the field of non-stationary flooding", Oil industry, no. 4, pp. 76–79, 2005.

[5] I.L. Khabibullin, S.I. Konovalova, L.A. Sadykova, "Investigation of temperature waves arising from the electromagnetic radiation absorption in layered media", Applied mechanics and technical physics, vol. 56, no. 3 (331), pp. 14–20, 2015.

[6] G.R. Izmailova, "Research on the high-frequency electromagnetic acoustic heating of an oil reservoir with further pumping of a solvent", High Temperature, vol. 56, no. 6, pp. 910–914, 2018.

[7] G.R. Izmailova, Investigation of the combined effect of electromagnetic, acoustic fields and mixing of oil displacement of solvent on a porous medium. Dis. … Cand. of Phys.-Mat. Sciences: 01.02.05. Уфа, 2017, 132 p.

[8] K.T. Tyncherov, V.Sh. Mukhametshin, M.G. Paderin, M.V. Selivanova, I.V. Shokurov, E.M. Almukhametova, "Thermoacoustic inductor for heavy oil extraction", IOP Conference Series: Materials Science and Engineering. Processing Equipment, Mechanical Engineering Processes and Metals Treatment, vol. 327, no. 4, pp. 1–8, 2018 [11th International Conference on Mechanical Engineering, Automation and Control Systems (MEACS 2017)]. DOI:10.1088/1757-899X/327/4/042111

[9] R.I. Suleimanov, L.Z. Zainagalina, M.Ya. Khabibullin, L.M. Zaripova, N.O. Kovalev, "Studying heat-affected zone deformations of electric arc welding", IOP Conference, ser. Materials Science and Engineering. Processing Equipment, Mechanical Engineering Processes and Metals Treatment, vol. 327, no. 3, art. 032053, 2018 [11th International Conference on Mechanical Engineering, Automation and Control Systems (MEACS 2017)]. DOI: 10.1088/1757-899X/327/3/032053

[10] V.V. Mukhametshin, V.E. Andreev, "Increasing the efficiency of assessing the performance of techniques aimed at expanding the use of resource potential of oilfields with hard-to-recover reserves", Bulletin of the Tomsk Polytechnic University, Geo Assets Engineering, vol. 329, no. 8, pp. 30–36, 2018.