ATLANTIS PRESS
Atlantis Highlights in Material Sciences and Technology (AHMST), volume 1
International Symposium "Engineering and Earth Sciences: Applied and Fundamental Research" (ISEES 2019)

New Method of Extinguishing Fires in Oil Wells

Bulchaev N.D.
Institute of Oil and Gas
Grozny State Oil Technical University
named after acad. M.D. Millionshchikov,
Grozny, Russia
nbulchaev@yandex.ru

Gairabekov I.G.
Building Faculty
Grozny State Oil Technical University
named after acad. M.D. Millionshchikov,
Grozny, Russia
ibragim.ggni@mail.ru

Khaladov A.Sh.
Institute of Oil and Gas
Grozny State Oil Technical University
named after acad. M.D. Millionshchikov,
Kh. Ibragimov Complex Institute of the Russian Academy of Sciences,
Grozny, Russia
haladov_a_sh@mail.ru

Mollaev R.Kh.
Institute of Oil and Gas
Grozny State Oil Technical University
named after acad. M.D. Millionshchikov,
Grozny, Russia
rusl.molaev@ yandex.ru

***Abstract* – Due to various reasons, oil and gas there are accidents associated with open emission formation fluid with subsequent ignition. Such accidents sometimes have catastrophic consequences. Extinguishing gas wells is done by method of limiting oxygen access to the burning area. This method includes applying an explosion near the well and creating a temporary vacuum. This method includes the use of an explosion near the well and the creation of a temporary vacuum.. This method is not applicable for extinguishing an oil well, because oil, again getting on the hot surface of the wellhead equipment, lights up again. Ignition of oil and gas wells is one of the most difficult accidents in the oil and gas industry. They can take the size of natural disasters, significantly complicate the activities of drilling and oil and gas companies, require the involvement of a large number of equipment, human and material resources, lead to depletion of mineral resources and cause irreparable damage to the environment. Even more catastrophic consequences are explosions and fires in the development of offshore fields. The accident, which occurred in the Gulf of Mexico in 2010, threw more than 5 million barrels of oil into ocean waters, with the result that the oil company VR lost about $ 22 billion. Given the negative side effects, this figure can be significantly increased. The article presents method of sealing of the burning well. For the first time in the practice of fire extinguishing, a method of using sealing hinges was applied, which was then tested on many oil and gas fields. The technology and non-standard equipment for the necessary works on wellhead sealing and cutting off the access of oxygen to the burning area are shown. The method of narrowing and localization of the burning well flame by means of flare stack, providing a safe working environment for rescuers with the help of special sprinkler и fire-protection suit is considered.**

Keywords – extinguishing open oil and gas fountains; wellhead sealing; flange; sprinkler; joints; deterioration of pumping equipment; water intake.

I. INTRODUCTION

Ensuring environmental safety is one of the most important social problems, directly or indirectly related to each person. One of the branches of the national economy that actively pollutes the components of the geosphere is the oil industry. In terms of their level of development, technological processes for the extraction, collection, transportation, and preparation of oil fall into the category of low-waste technologies. However, in view of the large volumes of production, violations of technological regimes, deviations from projects during construction, etc., the oil industry contributes significantly to the pollution of the geosphere [1].

Of all the types of known accidents on the oil field, wild gas flowing and oil spouter are particularly dangerous.

Open flow is uncontrolled outflow of reservoir fluids through the wellhead as a result of lack of control, technical malfunction, leakage, destruction of blowout equipment or due cratering blow-out.

Ignition of oil and gas wells is one of the most difficult accidents in the oil and gas industry. They can take the size of natural disasters, significantly complicate the activities of drilling and oil and gas companies, require the involvement of a large number of equipment, human and material resources, lead to depletion of mineral resources and cause irreparable damage to the environment.

If we turn to the world statistics of losses for the period of 1990-2009 due to the loss of control over the well, then the average annual loss is about 324 million USD. This statistic covers only losses of more than 1 million USD. The upper limit of loss is practically non-existent, the sad record is more than 1 billion USD [2].

Even more catastrophic consequences are explosions and fires in the development of offshore fields. The accident, which occurred in the Gulf of Mexico in 2010, threw more than 5 million barrels of oil into ocean waters, with the result that the oil company VR lost about $ 22 billion. Given the negative side effects, this figure can be significantly increased.

Consequences of emissions from wells are determined by the nature, intensity and duration of the outflow from the emergency well, which, in turn, is determined by the intensity of inflow of formation fluid from the reservoir and by its movement to the surface (through annulus or annular space, casing or drill pipe, wellhead or upper stop) fittings, etc.).

Most often, accidents happen due to personnel errors, violations of technology in the construction, operation, overhaul and underground repair of wells. Accidents are also promoted by low winter temperatures, shallow occurrence of productive layers with possible gas and oil occurrences and well cluster arrangement.

Oil and gas under high pressure come out through violations of flange connections of the Christmas tree and with a powerful jet they simultaneously beat upwards and through side branches. With a high content of suspended solids in the formation fluid, this jet is an increased danger. The height of the flame at the same time reaches 50 meters or more, the clouds of black smoke spread over a distance of 15-50 kilometers..

Accidents often acquire the features of natural disasters, for the elimination of which requires large material resources. As a rule, this significantly complicates the activities of all objects of industry, transport, agriculture and human settlements adjacent to the accident area.

Based on the above, it can be concluded that the development of new methods of elimination of burning open oil and gas flows is relevant for many spheres of human life and solves environmental, economic, technological, social and other problems.

II. MAIN BODY

This paper presents a method of extinguishing oil and gas fountains using sealing hinge plates. The method was tested on more than 60 emergency wells of the Chechen Republic [4]. The main purpose of the joints is to gradually block the access of oxygen to the combustion zone and stop the flow of oil and gas from the well.

The main stage of liquidation of burning fountains is preceded by the stage of preparatory work, during which determine:

- reliability of the protection of neighboring facilities;
- the possibility of evacuating valuable equipment from the danger zone;
- condition of the wellhead and equipment installed on it;
- the nature of spouting;
- sources of water supply and availability of water supplies;
- the nature and changes of wind direction.

Based on this, the method of dismantling the damaged part of the wellhead equipment (the Christmas tree) at the burning well is selected. The easiest option is to remove the damaged part with a crawler tractor. For this, two loops are being thrown onto the Christmas tree rebar (CT): the lower one is fixed by hand (using elongated hooks, various gripping devices) by hand just below the flange to be sealed; and the top is thrown on the upper part of the CT (above the damage). In this case, two tractors pull the ropes in one straight line, but in different directions. The lower loop is designed to reduce the impact on the cross head tubing and reduce the risk of breakage of the elevator lift, if it has not yet fallen. The upper loop breaks the fountain tree or part of it..

Sometimes for dismantling the damaged part of the wellhead equipment, you can use a gun shell, which, getting to the intended point, throws back the upper part of the equipment. This method is used only in those exceptional cases when other methods do not give the desired result. [5].

The next part of the preparatory work for extinguishing a fire is the work on installing a flare stack and preparing a pit with a capacity of 3,000 m3 and more for flooding with water. Water supply is provided by the nearest sources: rivers, reservoirs, wells using electric centrifugal pumps (ESP). It is necessary to take into account that increased requirements for resistance to thermal effects, reliable operation in conditions of high concentrations of mechanical impurities, etc. are imposed on water intake facilities. Increased requirements are caused by the problem of ensuring the wear resistance of pumping equipment, as well as abrasive materials (sand, clay, etc.) comes into pumping equipment together with water taken from different sources.

To meet these requirements, it has been proposed to use pumps with reinforced working parts having plasma claddings from zirconium, chromium, yttrium or aluminum oxides. This creates low-porous, thermal barrier and sealing coatings for wheels and guide vanes, ensuring proper equipment durability.

The processes occurring in open fires largely depend on the intensity and direction of the wind.

The burning zone in an open fire is determined by the distribution of combustible substances in space and the convective gas flows forming the burning zone. Heat-affected zone is mainly radiant heat flux, since convective heat fluxes go up and have little effect on the heat-affected zone on the land surface. In the case of burning wells, the smoke zone does not significantly impede the extinguishing of fires. On average, the maximum open fire temperature for combustible gases is 1200-1350 ° C, for liquids 1100-1300 ° C and for solid combustible materials of organic origin 1100-1250 ° C [6]. The stay time of workers in a gas environment and the time of their rest is established depending on the climatic and weather conditions, the degree of air pollution, the nature of the work, technical data and the features of the protective equipment used.

Heat-shielding screens are used as protective equipment; water curtains are also used, which fall freely in the form of a film or irrigate another shielding surface (for example, metal).

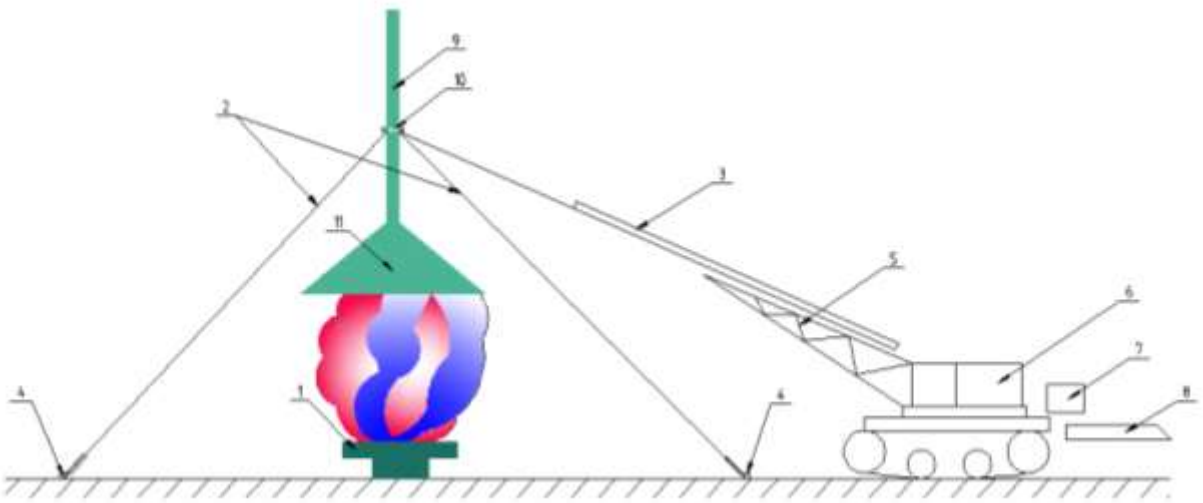

Fig. 1. Installation scheme of flare stack. 1- flange; 2- guy line; 3- telescopic boom; 4- anchor; 5- boom; 6- caterpillar truck; 7- counterbalance; 8- push rod tube; 9- flare stack; 10- retaining ring; 11-hood.

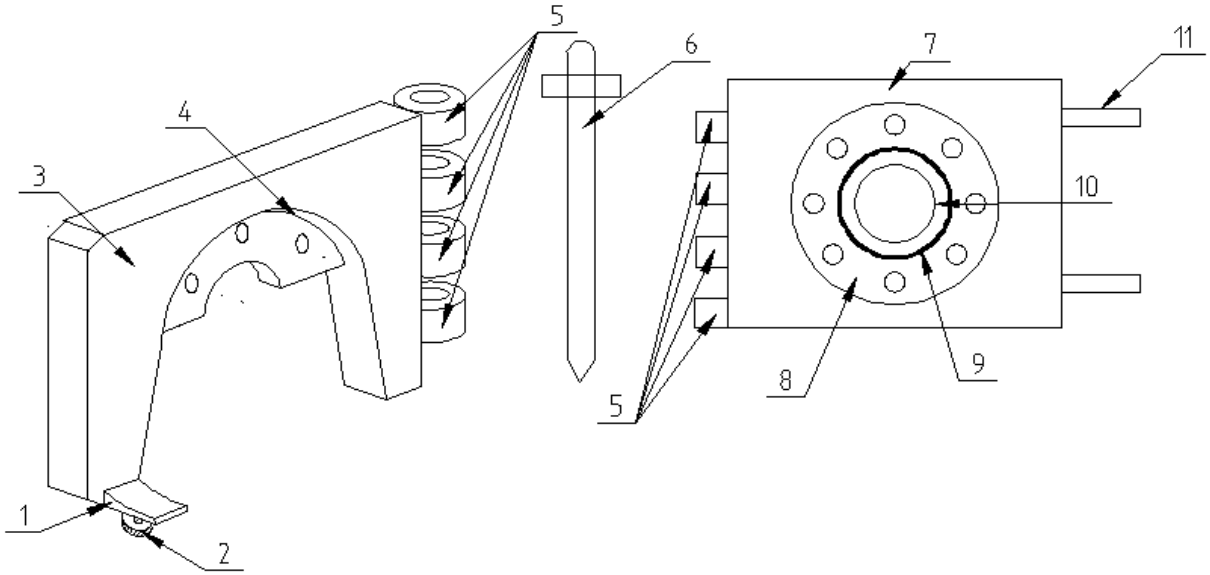

Fig. 2. Hinge plates. 1-adjustment lug; 2- adjusting screw; 3- the first plate; 4-nish for attachment to the flange of the Christmas tree; 5- bushes; 6-pin; 7- plate with valve; 8- gate flange; 9- seal ring; 10- flange passage; 11- handle

It is important that each rescuer has an individual sprinkler installation, which irrigates it with thin streams of water. It is placed on the shoulders of the rescuer, and the dispersing device (in the form of a shower mesh) is located just above the head. Water supply of this installation is provided from the pump installation, located near the water pit, with the help of a long hose.

Thus, after placing water jets (nozzles) around the burning well and their readiness for directional sprinkling, they begin work on the extension of the flare stack (Figure 1). The flare stack is made of an oil pipe Ø300 mm or more, L = 6-8 m. At the lower end of the pipe, a cone-shaped hood with a diameter of 1-1.5 m is installed to collect and direct the flame into the pipe. On the mechanical boom of the special caterpillar truck, the flare stack is mounted vertically so that the main flame tip enters the cone-shaped hood. On the fixing belt of the pipe are suspended braces from a thin steel rope. The cart is pushed or rolled up to the well by means of a rope with a tractor located on the opposite side at a safe distance from the flame. If necessary, additional caterpillar tractors can help to maintain the equilibrium state of the moving system using the guy lines, moving at the same time with the speed of the first caterpillar tractor along the route prepared beforehand (in difficult terrain conditions). From this moment begins the process of spraying the flare stack, protecting it and the boom from incandescence. After the flare stack is installed and the flame rushes into it, the stack is fixed on three anchors with the help of guy lines and their regulation. Anchors tend to be placed around the well so that the angle between the axis of the well (flare stack) and the two anchors in the horizontal plane is 120 °.

The wellhead sealing with the help of special hinges was used in practice in the following cases:

1. When leakages occurred above the tubular head of the Christmas tree, which implies relatively simple tasks for conducting special works.

In these cases, the Christmas tree itself or its part was knocked out, and a special joint was prepared for landing on the corresponding flange, from which burning oil was extracted at a sufficiently high speed.

2. The most difficult and complex tasks arose in cases where the flame was coming simultaneously from the top and lateral branches of the cross of a tubular head of the Christmas tree. As a rule, in such cases, the fall of the lifting pipes, as well as violations of the tightness of the columns, which caused backflows, etc. [7].

3. Cases where the CT had to be completely dismantled from the pedestal (upper flange) of the column head were extremely rare.

Consider in more detail the option of sealing cross of tubing head (figure 2).

The first hinge plate is hung on the side flange (or bald patch) of the cross. This is achieved by using 1-2 bolts (not studs, as flanges are usually connected) with a shortened hex head. These bolts also have an internal axial (concentric) thread used to secure the second plate. After the first plate is firmly fixed, another (counter) plate is placed on it, on which a valve (or high-pressure valve) is rigidly fixed with small tacks by welding with a 1–1.5 m branch pipe (Figure 2). The flange is installed faucet under the pressure gauge. [8].

The hinge is achieved with the help of a special pin, which after reaching the coaxiality of the loops (sleeves) of both plates from above is placed in the working position. The hinge is attached when it is open. If the flame strongly interferes with the attachment of the hinge plate, use special fireproof shields to cut off the fire. Then the hinge is quickly closed when the valve is open: the flame rushes through the valve into the branch pipe, which has a rolled up end to create thrust.

Even when a slightly elongated (by 4-5 mm) seal ring fixed in the groove (groove) of the valve flange, has not yet sat down in the groove of the cross flange (Figure 3), the flame no longer hits the sides, and rescuers can center and fix the second the plate. To center the plate, use the adjusting screws mounted in the first slab on specially made protrusions.

After the seal ring is seated, the threaded connections are tightened using special wrenches.

The same is done with the second side branch of the cross.

The closing of the upper flange is similar to the previous one. However, the rotation of the upper plate and its landing are carried out with the help of two delays: one closes, the other pulls in the opposite direction in order to avoid a sharp blow, which could lead to a breakdown of the hinge. The hinge is made on the same principle. . The requirements for the strength and reliability of the upper hinge are significantly higher than for the side ones, because bending moments of forces act on the plates associated with a certain cantilever arrangement of the loops and the connecting pin relative to the vertical axis of the cross. Here the hinge base itself (the distance between the extreme joints) should be much wider, since it is necessary to ensure the stability of the movable plate loaded with the weight of the shut-off valves and the branch pipe. The lower hinge plate weakened by grooves in the body. Therefore, the material for the manufacture of hinges is selected taking into account the possible loads. Along its strength characteristics, alloy steel of 40KhN or 35KhNG type meets these requirements. Before operation, sealing equipment must pass hydrotesting to the required pressure. [9].

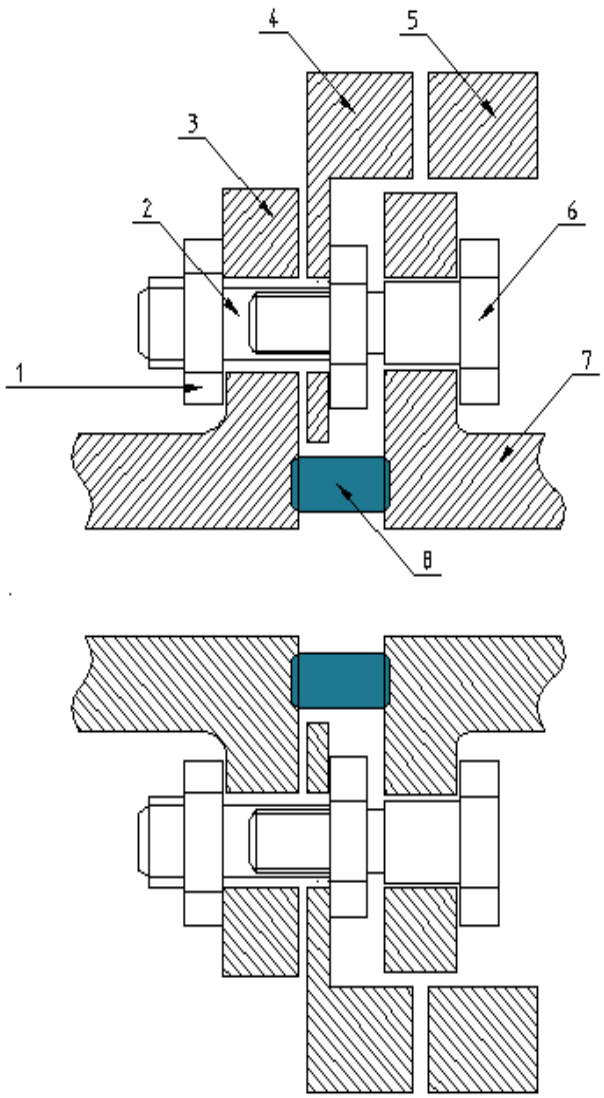

Fig. 3. Connection scheme of hinged plates: 1- nut; 2- special bolt with internal thread.; 3- valve flange of CT; 4- the first plate of the sealing device; 5- the second plate of the sealing device; 6- special shoulder bolt; 7- valve flange; 8- seal ring welded to the valve.

After sealing the wellhead determine the consequences of a fire, which can not but affect the state of the well itself. The well may contain broken down pipes (one or two rows of oil well tubing), behind-the-casing overflows, leaks in the cement stone, formation fluids around the wellhead appear [10].

Only after a thorough study of all damage to the well develop a plan of repair work.

III. CONCLUSION

After the elimination of fire and a preliminary determination of the scale of the consequences of a fire, it is necessary to study the state of the well and downhole equipment. Then it is necessary to clarify and approve the list of works on the types of underground and workover of the well. For the prevention of open emissions with fire, a special plan of measures is developed in conjunction with the counter-fountain service, a division of the Emergencies Ministry. In oil and gas producing and drilling organizations, it is recommended to have a stock of non-standard equipment for sealing the wellhead of each well and various devices.

References

[1] N.D. Bulchaev, "From the experience of the liquidation of open oil fountains", Materials of a scientific and practical seminar, pp. 38, 39, 2011.

[2] O.A. Druzhinin, The probability of occurrence of the insured event "Loss of control over the well". Insurance in Russia. Retrieved from: http://www.allinsurance.ru/AllDocs

[3] "Editorial Board Response to Reader's Question", Arguments and Facts, 2013.

[4] N.D. Bulchaev, E.V. Bezverhaya, "The method of sealing the mouth of a burning oil well", Gas industry, vol. 4/658, pp. 85–87, 2011.

[5] A.G. Baranovskiy, Localization of the flame and articulated method of sealing the wellhead. LAP LAMBERT Academic Publishing, 2014.

[6] S.I. Vasilyev, E.E. Miloserdov, N.D. Bulchaev, "Mining and geological and technical and technological factors causing fountain danger during the construction, operation and repair of wells", Mining industry, vol. 3 (121), pp. 85, 2015.

[7] S.I. Vasilyev, E.E. Miloserdov, N.D. Bulchaev, "Environmental problems in the development of oil and gas fields in Eastern Siberia", Mining industry, vol. 3 (121), pp. 88–89, 2015.

[8] N.D. Bulchaev, Y.N. Bezborodov, L.N. Gorbunova, N.N. Pozdnyakova, Safety and environmental project, 2015, pp. 148.

[9] N.D. Bulchaev, E.V. Bezverhaya, A.G. Baranovskiy, "Justification of the parameters of the technological scheme of localization of the flame of a burning well", Gaz industry, vol. 1, pp. 118–120, 2016.

[10] S.I. Vasilyev, E.E. Miloserdov, "Problems of operation of oil and gas wells" Mining industry, vol. 3 (121), pp. 86–87, 2015.