An Improved Cascaded-SVG Reactive Current Detecting Method

Hai-chuan ZHANG, Bao-long YANG, Jing-wen SUN, Zhan-ying LI and Yue-ling NIU

School of Information Science and Engineering, Dalian Polytechnic University, Dalian, China, 116034

Keywords: SVG, Reactive current, Instantaneous power balance, Matlab/Simulink.

Abstract. Static Var Generator (SVG) is a new generational dynamic reactive power compensation system and the detection of directive current generally uses i_p-i_q operation mode. However, the command value of output reactive current only depended on the reactive current detection of main circuit based on the i_p-i_q operation mode in the traditional SVG device. This method limits the real-time compensation and the accuracy of reactive power compensation is not guaranteed based on single detecting point. For solving this problem, an improved method for detecting the reactive current based on instantaneous power balance is proposed in this paper. The current information of detecting point and compensating point are introduced and the compensatory accuracy is improved. The improved method is applied in the Cascaded-SVG and the simulation results with matlab/Simulink verify the correctness and effectiveness of the proposed method.

Introduction

With the rapid development of power electronic technology, power electronic sets have been widely used, which affect the electric energy quality, the stability, safety and economy of the electric system [1]. Static Var Generator (SVG) is reactive compensatory device which is applied extremely widespread today [2].

Presently, the main approach called i_p-i_q operation mode is a kind of calculating approach based on the instantaneous reactive power principle [4-6]. Due to this approach is beneficial to the detection for reactive current, it also has well real-time. However, it can produce the direct current component, which affects the process of the reactive compensation[7]. Also, only to detect the information of reactive current before compensating reactive current and neglecting the existence of reactive power will make the Cascaded-SVG to lag a compensative season.

Face to the problem, we present a method to detect the reactive power. The main process is detecting the output current and the current of main circuit by i_p-i_q method to obtain more precise reactive current command. The command drives the Cascaded-SVG inverter. Therefore, this process gives the Cascaded-SVG current a feedback control, which not only reduces the errors, but also improves the real-time compensation. Moreover, this approach is tested by Matlab/Simulink, the experimental results prove that it not only increases the accuracy of reactive compensation of Cascaded-SVG device, but also improves the real-time compensation.

The Traditional Approach for Detecting Reactive Current of Cascaded-SVG

The Basic Theory of Cascaded-SVG

The basic theory of Cascaded-SVG through parallel connecting the circuits which composed by series connecting several H-bridges in the grid by electric reactor, due to the cascaded-SVG purposed to make dynamically reactive compensation come true. We can appropriately adjust the output voltage value and phase of bridge circuit alternating current, or directly control its alternating current which makes the circuit to absorb and to produce enough reactive current to reach our destination[8].

Copyright © 2019, the Authors. Published by Atlantis Press.
This is an open access article under the CC BY-NC license (http://creativecommons.org/licenses/by-nc/4.0/).

The theory of Cascaded-SVG is explained by the Figure 1 below. We set respectively the network voltage for U_S, the output alternating current voltage of Cascaded-SVG for U_{SVG} , the voltage value of joint inductance X and R for U_L. The U_L is the vector difference between U_S and U_{SVG}. The current of joint inductance X can be controlled by its voltage, which is also the current what absorbed by Cascaded-SVG from grid. Therefore, the amplitude of output voltage Cascaded-SVG alternating current side and its phase relative to US can change the voltage of joint inductance. So the phase and the amplitude of Cascaded-SVG absorbed from power grid can be controlled. And it also controls the properties and size of reactive power absorbed by Cascaded-SVG.

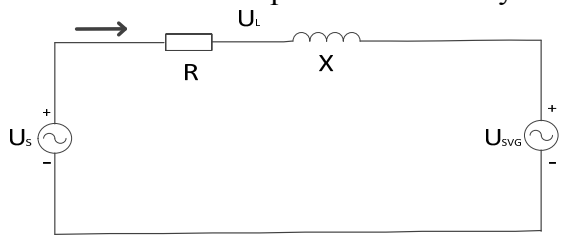

Figure 1. Equivalent circuit

The Traditional Approach for Detecting the Reactive Current of Cascaded-SVG

With the three-phases instantaneous reactive theory is presented and developing, it overturned the traditional power principle, and makes a big breakthrough in the power system area of the detecting reactive current approach[10]. From the instantaneous reactive current theory, three-phases circuit active current i_p have a relationship with the instantaneous reactive current i_q and three-phases current instantaneous value i_{sa}、 i_{sb} and i_{sc} . The relationship is explained as below.

$$\begin{bmatrix} i_p \\ i_q \end{bmatrix} = C \cdot C_{32} \cdot \begin{bmatrix} i_{sa} \\ i_{sb} \\ i_{sc} \end{bmatrix}. \qquad C = \begin{bmatrix} \sin\omega t & -\cos\omega t \\ -\cos\omega t & -\sin\omega t \end{bmatrix}, \; C_{32} = \sqrt{\frac{2}{3}} \begin{bmatrix} 1 & -1/2 & -1/2 \\ 0 & \sqrt{3}/2 & -\sqrt{3}/2 \end{bmatrix}. \tag{1}$$

The calculating principle for detecting reactive current i_p-i_q is explained by Figure 2 as below.

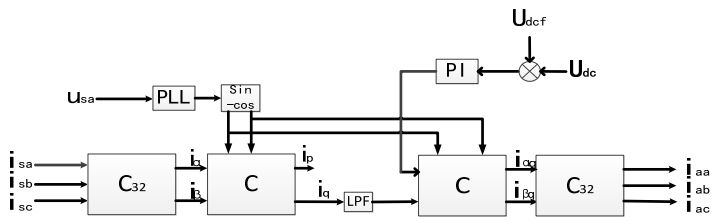

Figure 2. Traditional the current detecting of Cascaded-SVG schematic

As the Figure 2 shows, the detecting principle is that: firstly, the detected load current i_{sa}、 i_{sb} and i_{sc} through the formula 1 calculate, we can get the active component i_p and the reactive component i_q of the load in the rotating coordinate system. Then, the active component i_p and the reactive component i_q remove the alternating current component by low pass filter. The result and Δp make the inverse transformation by the formula 2 to get i_{aa}、 i_{ab} and i_{ac}. Where, the Δp is the difference value which the value of the direct current side capacity voltage U_{dcf} and feedback value capacity voltage of inverter U_{dc}. The i_{aa}、 i_{ab} and i_{ac} are the reactive command of Cascaded-SVG.

$$C_{23} = C_{32}^T \begin{bmatrix} i_{aa} \\ i_{ab} \\ i_{ac} \end{bmatrix} = C_{23} \cdot C \begin{bmatrix} \Delta i_p \\ i_q \end{bmatrix}. \tag{2}$$

Advanced Approach to Detecting Reactive Current of Cascaded-SVG

The traditional approach to detecting reactive current of Cascaded-SVG is just taking sample from the current in the main circuit, it neglects the reactive condition after compensating. Cascaded-SVG device compensates the load reactive condition by this way, which makes Cascaded-SVG to lag one compensate season and can not reach the real-time character of Cascaded-SVG. For this problem, this paper raises a kind of improve approach to detecting reactive current of Cascaded-SVG. The theory is explained in Figure 3 as below.

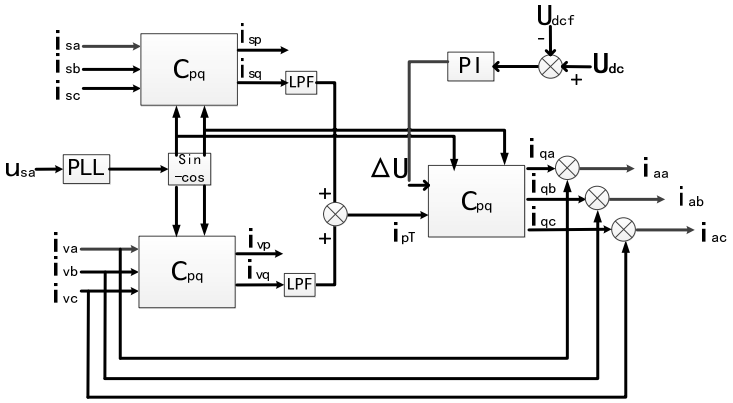

Figure 3. The advanced approach to detecting reactive current of Cascaded-SVG schematic

The improve detecting reactive current of Cascaded-SVG approach uses the current of the main circuit i_{sa}、i_{sb}、i_{sc} and outputting current of Cascaded-SVG i_{va}、i_{vb}、i_{vc}.

We make abc-dp transformation to get the reactive components i_{sa}、i_{vb} and i_{va}. Due to the information phase of the phase voltage in the main circuit is the same as that of compensate phase voltage, we can share the vector of voltage in the main circuit. We set the initial value of the voltage vector phase angle as 0, and then the transformation matrix is shown as below.

$$C_{pq} = \sqrt{\frac{2}{3}} \begin{bmatrix} \sin(\omega t) & \sin(\omega t - \frac{2\pi}{3}) & \sin(\omega t + \frac{2\pi}{3}) \\ -\cos(\omega t) & -\cos(\omega t - \frac{2\pi}{3}) & -\cos(\omega t + \frac{2\pi}{3}) \end{bmatrix}. \tag{3}$$

Next, we delete the alternating current components through low pass filter. The respective combination of the reactive direct current can be regarded as the reactive components through abc-dp inverse transformation. Therefore, we can get i_{qa}、i_{qb} and i_{qc} .The abc-dp transformation equation is shown as below.

$$\begin{bmatrix} i_{qa} \\ i_{qb} \\ i_{qc} \end{bmatrix} = c_{pq}^{-1} \begin{bmatrix} \Delta U \\ i_{qT} \end{bmatrix}. \tag{4}$$

The inverse transformation matrix is:

$$C_{pq}^{-1} = \begin{bmatrix} \sin(\omega t) & -\cos(\omega t) \\ \sin(\omega t - \frac{2\pi}{3}) & -\cos(\omega t - \frac{2\pi}{3}) \\ \sin(\omega t + \frac{2\pi}{3}) & -\cos(\omega t + \frac{2\pi}{3}) \end{bmatrix}. \tag{5}$$

Comparing i_{qa}、i_{qb}、i_{qc} with compensative current i_{va}、i_{vb}、i_{vc}, we can get the three-phase reactive current command value of Cascaded-SVG device i_{aa}、i_{ab}、i_{ac}.

Emulation Proof and Analysis

Due to prove the correctness of approach which discussed in this dissertation and to compare with traditional reactive current detecting approach, we can prove that the approach raised in the dissertation is more effective. Next, we can apply the software called matlab/simulink to build Cascaded-SVG emulation system which has three-phase star connection, 10KV voltage and 1M var capacity. Each phase of Cascaded-SVG is series connected by 12 H-bridge inverters. The key parameters in main circuit are explained as below:

The rated voltage value: U_n=10KV. Compensation capacity: S_n =1Mvar.

Connection inductance: $L_s = 0.15 \times \frac{3U_n^2}{2\sqrt{3}\pi\omega S_n}$ =10mH.

The direct current side capacity voltage $V_{dc} = \frac{\sqrt{2} \times (1+0.15)U_n}{NM}$ =1505V.

The direct current capacitance $C = \frac{1.15S_n}{3NMU_{dc}\Delta U_{dc}}$ =700uF.

We set the inductive per unit value as 0.15, and angular frequency is 50 Hz, the maximum modulation ratio is 0.9, the number of series connection for each phase H-bridge is 12.Then, we use the traditional approach to detect reactive current. We get that there still exists reactive power in the main circuit after compensating.

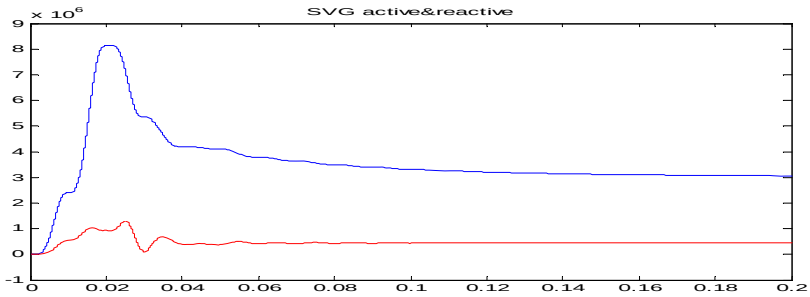

Figure 4. The active & reactive of the traditional Cascaded-SVG

As the Figure 4 shows above, the blue line represents the active power in the main circuit; and the red line represents the reactive power in the main circuit. The output current of Cascaded-SVG can not completely compensate those reactive current which the main circuit needs, it means traditional approach to detecting reactive current of Cascaded-SVG produces several errors.

We get the advanced approach to detecting reactive current through detecting the output current and calculating with the current value in the main circuit by the ip-iq calculating approach.

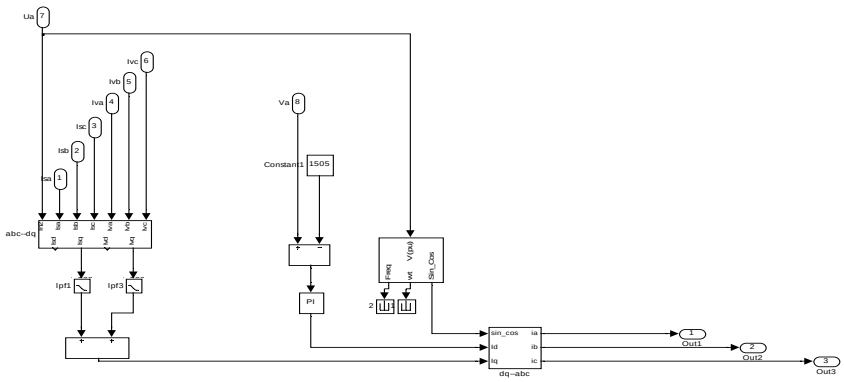

Figure 5. The advanced approach to detecting reactive current of Cascaded-SVG

As shown in Figure 5, we apply abc-dp transformation to transform the current that are i_{sa}、i_{sb}、i_{sc} and output current i_{va}、i_{vb}、i_{vc} together to get the reactive components i_{sq} and i_{vq}. Then the combination is i_q, because they are all direct current components. We can apply the difference between the capacity voltage of the detective direct current side and rated voltage to get i_d and i_q by PI controller. Finally, we apply the dp-abc inverse transformation to obtain i_{qa}、i_{qb}、i_{qc}.As shown in Figure 6, the reactive power value in main circuit is almost 0 .The Figure 7 shows that phases of the voltage and current are almost kept consistent after compensation processing, the waveform of offset current is favorable. Figure 8 indicates the output voltage and current of Cascaded-SVG. Figure 9 expresses the capacitor voltage of direct current side, and the voltage will remain constant while meeting the rated value.

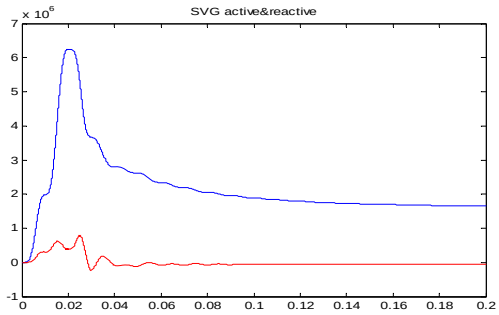

Figure 6. The active & reactive

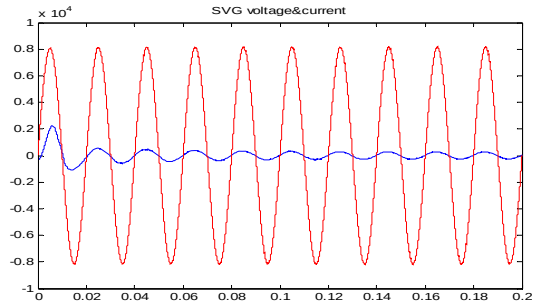

Figure 7. The phase voltage and current

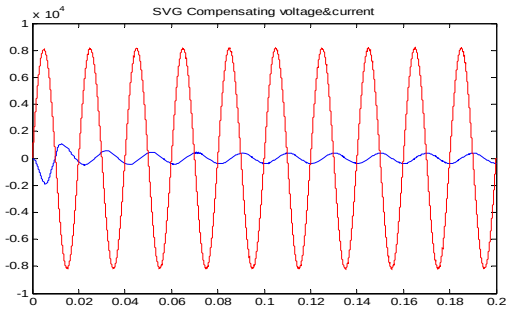

Figure 8. The voltage and current output

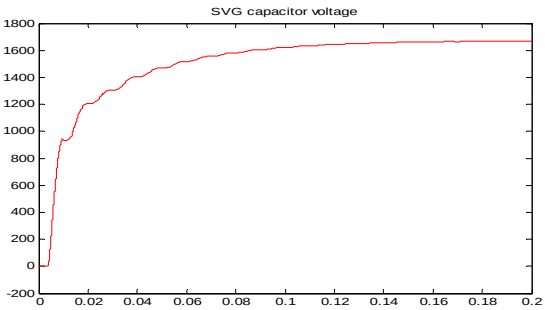

Figure 9. The capacity voltage

As shown above in the simulation results，this approach of Cascaded-SVG proposed in this paper has also advantages of quick response, high accuracy and so on. Figure 5 and Figure 6 illustrate that the output current could compensate reactive better for main circuit by improved Cascaded-SVG. From Figure 7-9, we can easily find that the phase of voltage and current are roughly same on the main circuit after compensation by using proposed approach, the waveform of offset voltage and current are favorable, and each in the direct current side capacitor voltage is stable.

Conclusion

In this paper, an improved approach of Cascaded-SVG reactive current detection is proposed. For solving the problem of single detection and without accurate offset to main circuit by traditional Cascaded-SVG, feedback processing for output current is added. It enhances the accuracy of reactive introduction, improves the result of reactive current detection, and it also solves the problem of the single detect point caused error for Cascaded-SVG device. What is more, the proposed method solves a ubiquitous problem that compensation cycle fall behind one after SVG reactive power dynamic compensation.

Based on improved Cascaded-SVG reactive current detection we proposed in this paper, the speed of SVG compensation is improved, the error of compensation is reduced, the real-time and accuracy performance is satisfactory and these meets the need of practical application.

References

[1] LI Hong. Introduction to the power electronics technology of the 21st century. Power electronics, 2001,35(4):57-60.

[2] WANG Zhao-an, YANG Jun, LIU Jin-jun. Harmonic suppression and reactive power compensation [M]. 2 edition. Beijing. Machinery industry press. 2005.

[3] GENG Jun-cheng. Modeling and Controlling of Cascade Static Synchronous Compensator [Doctoral Dissertation].

[4] WU Jian-hua, FU Wei, YAO Li-qiang, Study on the current detecting method for reactive power and harmonic of the three-phase circuits[C]//Control and Decision Conference,2009;2048-2051.

[5] GU Qi-min, ZHENG Jian-yong, YOU Jun. A new method of current detection based on dp0-coordinete-transformation [J].Power System Protection and Control, 2010, 38(23):21-25.

[6] LIU Liang, DENG Ming-gao, OU YANG Hong-lin. A research of adaptive detection algorithm for D-STATCOM [J].Power System Protection and Control, 2011, 39(5):115-119.

[7] SHEN Fei, WANGH Ya-feng, LIU Wen-hua. Large capacity STATCOM main circuit structure of the analysis and comparison. power system automation, 2003,27 (8):59-65.

[8] JIANG Qi-rong, XIE Xiao-xin, CHEN Jiang-ye. Power system parallel compensation for structure, principle, control and application. Bei Jing. China Machine Press, 2004.

[9] Akagi H,Kanazawa Y, Nabae A. Generalized theory of the instantaneous reactive power in three-phase circuits[C]// IEEE & JIEE. proceedings IPEC.Tokyo:1983,103(7): 483-490.