ATLANTIS PRESS
Advances in Social Science, Education and Humanities Research, volume 224
1st Educational Science International Conference (ESIC 2018)

The Effect of Learning Environment on Learning Discipline and Self-Regulation on Students' Mathematical Learning Outcomes

Abd. Basir Abbas
Lecturers at the Faculty of Theacher Training and Education, Mulawarman University
Indonesian Mathematics Society
Samarinda, Indonesia
basir_unmul@yahoo.co.id

***Abstract*— The study of the effect of factors in students, namely learning environment, self-regulation and learning discipline on mathematical learning outcomes through Structural Equation Modeling was carried out on the eighth grade of State Junior High Schools in Samarinda Ilir District. Confirmatory factor analysis was conducted to evaluate the measurement model in the form of testing for convergent and discriminant validity, and reliability. Furthermore, path analysis was developed to investigate the path of structural relationships between variables. The results show that the structural path model developed fit with the data. All indicators of the goodness of fit model have met the threshold. In the structural model, the direct and indirect effects of self-regulation on learning outcomes are both significant, whereas from the learning environment only significant indirect effect, and the learning discipline variable is a partial mediation of the two indirect effects.**

Keywords*— *Direct effect, Learning outcome, Factor in students, Structural model.

I. INTRODUCTION

Increasing readiness and quality of student learning in schools is an effort that must be carried out continuously, following the challenges of the needs and dynamics of the times. Various efforts in the form of studies or research must be carried out, to know in depth and conditionally what factors or variables can influence effective learning, so that satisfactory learning outcomes can be obtained.

The results of research on various factors both internal and external students that can influence learning outcomes have been widely carried out [3,4,5,6,7,8]. They found several variables related to students' self that must be considered and related to student learning in school, such as self-regulation, achievement motivation, learning discipline and student learning environment [20,23]. However, the entire study is still limited to investigating the direct relationship of independent variables to the dependent variable of learning outcomes. The direct relationship of an independent variable to the dependent variable controlled by the presence of other independent variables is stated in the linear regression relationship model [9]. The method of investigation like this still leaves information about how the indirect relationship of an independent variable to learning outcomes. Similarly, the problem that can arise with the use of a linear regression model if there is a relationship or correlation between the independent variables [22]. This gives rise to a variance inflation factor from the coefficient estimation in the regression analysis and subsequently leads to an inaccurate estimation of the relationship to the dependent variable [2,10].

Research on psychological factors of students towards mathematics learning achievement using path analysis methods, as an alternative analysis method that can solve the above problems, has also been frequently done [11,12,13,14,15,16]. However, in this study, the overall measurement of variables from the indicators is still expressed in the formative form of summation, ie the score of the measurement results of variables is expressed as the sum of the scores of the indicators. If there are several indicators that interact in representing the variables, then of course the score of the variable will be rated higher. Similarly, the function of an intervening variable in the indirect effect of an independent variable on the learning outcome variable has not been investigated in the use of path analysis in both studies.

The aim of this study are to investigate the influence of factors in students, namely learning environment, self-regulation and discipline learning on mathematical learning outcomes through Structural Equation Modeling and to investigate whether learning discipline is a mediation on the effect of learning environment and selfregulation on mathematical learning outcomes

II. METHODS

This ex-post facto type research was conducted from September to October 2018. Structural Equation Modeling (SEM) was built to investigate the relationship between factors in students (learning environment, self-regulation and learning discipline) towards their learning outcomes (mathematics). The study population was all eighth graders of public junior high schools in Samarinda Ilir sub-district. There are 6 public junior high schools (PJHC) in this study population. By proportional cluster random sampling, are determined Samarinda 2nd PJHC, Samarinda 6th PJHC, and Samarinda 21st PJHC, then 4 classes were chosen each of the three schools so that 381 students were selected as samples of this study.

The three variables, namely learning environment, selfregulation and learning discipline are measured using questionnaires, and the mathematics learning outcomes variable is measured using multiple choice test instruments.

Questionnaires and test instruments are made based on the indicators of the construct of each variable.

A. Structural Equation Modeling

The structural equation modeling process is carried out in two stages, namely validating the measurement model and fitting the structural model. The former is accomplished through confirmatory factor analysis, while the latter is accomplished through path analysis with latent variables [1,21,23]. The exact analysis factor used here is common factor analysis, not principle components analysis.

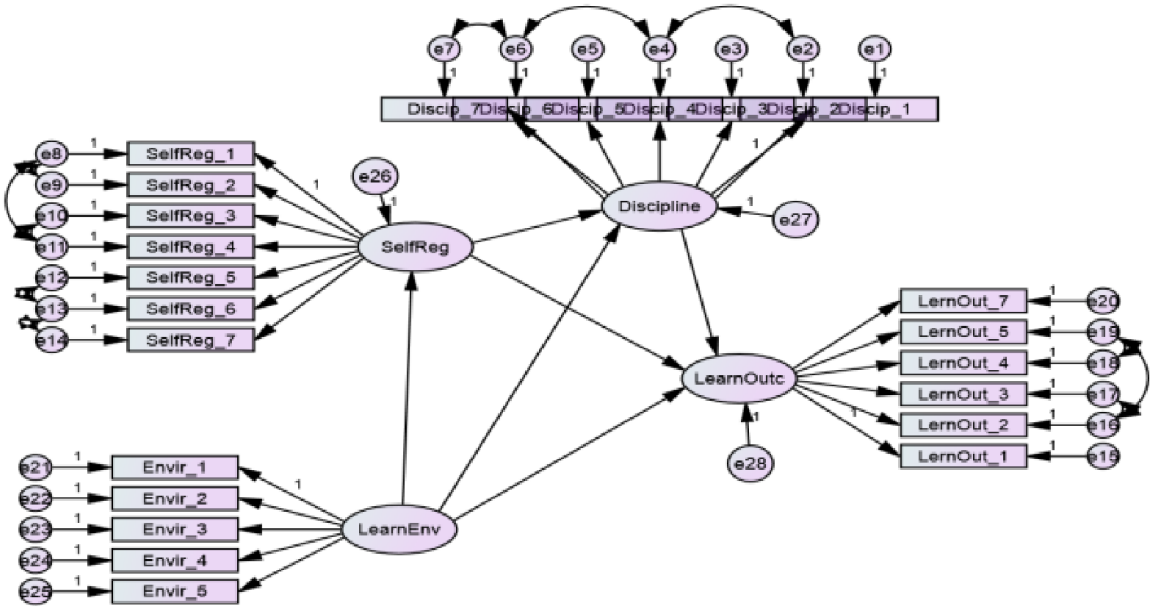

Fig. 1. Structural equation modeling of research

Confirmatory Factor Analysis (CFA),-- At this confirmatory factor analysis, each of the four variables in the model is conceptualized as a latent one, measured by multiple indicators. Previously, variables were learning environment, self-regulation, learning discipline, and mathematics learning outcomes consisting of 5, 7, 7 and 8 indicators respectively.

CFA is intended to examine convergent validity, discriminant validity, reliability and model fit. (Khine et al. 2013). Convergence of validity is checked through the magnitude of the average variance extracted (AVE) and factor loading values (FL) of each indicator against the latent variable, by looking at whether AVE and FL values are met by the threshold (Rule of thumb; AVE ≥ 0,5 and FL ≥ 0.70). Before checking the discriminant validity, the Maximum Shared Variance MSV and Average Shared Variance (ASV) values are calculated first. Discriminant validity is declared good if both MSV and ASV are less than AVE (Garson 2012). Whereas for reliability checking, this study uses Composite Reliability (CR) with threshold is CR ≥ 0.5. Furthermore, model fit are used to access whether model fits the data better than another model. The statistics used to test fit models in this study are the Chi-square/df (Cmin/df), Goodness of fit index (GFI), Adjusted-GFI (AGFI), Comparative fit index (CFI), and the Root mean square error of approximation (RMSEA) with successive thresholds are Cmin/df < 3, GFI > 0.90, AGFI > 0.80, CFI > 0.90, and RMSEA <0.05 (Table 1).

Fitting the structural model,-- Our structural model is is the set of exogenous variabel (learning environment) and endogenous variables (self-regulation, learning discipline, and mathematics learning outcomes) in the model, together the direct effects (straight arrow) connecting them, correlations among indicators, and the disturbance terms for these variables (Fig. 1). Analysis of the structural model involves comparing its fit with the independence model, with the measurement model, and with different structural models between before and after being trimmed. The statistics used to test fit models are the five statistics that have been previously stated. Before trimming, first testing the significance of each path coefficient with a significant level of testing α = 0.05 or Z-value > 1,96. Furthermore, the insignificant coefficients allow it to be removed by considering supporting theories.

TABLE I. THRESHOLDS OF THE MODEL FIT MEASURE

Measure	Threshold
Chi-square/df (Cmin/df)	< 3 Good
p-value for the model	> 0.05
Goodness of fit index (GFI)	> 0.95; > 0.90 traditional
Adjusted-GFI (AGFI)	> 0.80
Comparative fit index (CFI)	> 0.95; > 0.90 traditional
Root mean square error of approximation (RMSEA)	< 0.05; 0.05 - 0.10 moderat

B. The method Determines The Type of Mediation

We want to investigate whether the learning discipline variable is mediation on the influence of learning environment variables and self-regulation on mathematics learning outcomes. The way we do it is by making two path models, namely the first path model about the effect of both exogenous variables on learning outcomes variables, without the presence of discipline variables, and the second path model on the effect of both exogenous variables on learning outcomes, with the presence of discipline variables. In the second path model, certainly there are indirect effects of both exogenous variables on learning outcomes, through disciplinary variables. If the indirect influence is significant, then one of the types of mediation is obtained for the learning discipline shown in Table II.

Table II Method for Determining the Type of Mediation

Hypothesis	Direct Effects		Indirect Effects	Mediation Type
	Without Mediation	With Mediation		
SelfReg > Discipl > LearnOut	significant	insignificant	significant	Full mediation
SelfReg > Discipl > LearnOut	significant	significant+decr	significant	Partial mediation
SelfReg > Discipl > LearnOut	insignificant	insignificant	significant	Indirect Effects

1. If the direct influence without the presence of the mediating variable is significant and after the presence of the mediating variable changes to be insignificant then full mediation is obtained.
2. If the direct influence without the presence of the mediating variable is significant and after the presence of the mediating variable changes to be still significant but decreases, partial mediation is obtained.
3. If the two direct effects, namely presence and without the presence of mediating variables, are not significant, then there is a direct influence.

All analysis, calculation and significance testing in this study use integrated SPSS software with AMOS version 21 software.

III. RESULT AND DISCUSSION

A. Evaluation of Measurement Model

Measurement evaluation of each variable stated in a measurement model is carried out through confirmatory factor analysis. This CFA is preceded by an exploratory factor analysis (EFA), aimed at facilitating the acquisition of the expected factor loadings. Fig. 2 and Table 3, present information about the results of the analysis, especially showing the magnitude of the factor loadings and covariance given among error terms of the indicator variables.

TABLE III. ESTIMATION OF THE FACTOR LOADING ON THE MEASUREMENT MODEL DETERMINES THE TYPE OF MEDIATION

Path of effect			Estimate
Discip_1	<---	Discipline	0.76
Discip_2	<---	Discipline	0.857
Discip_3	<---	Discipline	0.851
Discip_4	<---	Discipline	0.871
Discip_5	<---	Discipline	0.814
Discip_6	<---	Discipline	0.801
Discip_7	<---	Discipline	0.827
SelfReg_1	<---	SelfReg	0.828
SelfReg_2	<---	SelfReg	0.884
SelfReg_3	<---	SelfReg	0.886
SelfReg_4	<---	SelfReg	0.913
SelfReg_5	<---	SelfReg	0.845
SelfReg_6	<---	SelfReg	0.751
SelfReg_7	<---	SelfReg	0.7
LernOut_1	<---	LearnOutc	0.711

CFA which is supported by EFA produces measurements of latent variables with high factors loading, and each latent variable, namely learning environment, selfregulation, learning discipline, and learning outcomes are reflected by successive 5, 7, 7, 6 indicators variable. All factor loads of the four latent variables are greater than 0.7 (see column 2 in Table 3) and based on EFA there are 2 indicator variables of learning outcames that are issued, namely indicator variables 6 and 8.

Five statistics which are used to measures goodness of model fit meet each threshold levels. The five statistical values calculated using AMOS software are shown in Fig. 2. Cmin/df = 1.728 meets the threshold, which is less than 3, GFI = 0.915 meets the traditional threshold, which is more than 0.90. Whereas AGFI = 0.892 and CFI = 0.976 also achieve each of the positions, which are more than 0.80 and more than 0.95, respectively. Similarly, RMSEA = 0.044 <0.05. In general it can be concluded that our model is good fit.

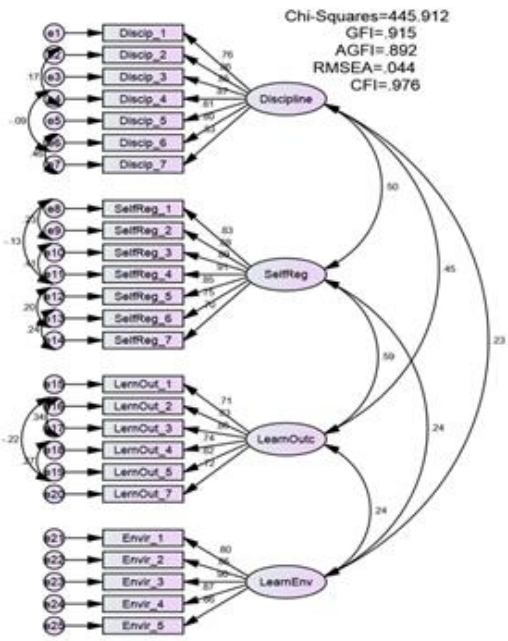

Fig. 2. Loading factors and goodness of fit of Confirmatory factor analysis

All of the four latent variables have AVE that is more than 0.5 (shown in Table 4), and their factors loading are all greater than 0.7 so that a good convergent validity has been achieved. Similarly, it is shown in this table that the results of the calculation of ASV and MSV values from the four variables are always less than the corresponding AVE value, so that good discriminant validity has been fulfilled. The calculation results of composite reliability for each of the four variables are listed in the second column. All of these CR are more than 0.7 and even above 0.9.

TABLE IV. AVE, ASV, MSV, AND CR VALUES OF THE FOUR LATENT VARIABLES

	CR	**AVE**	**MSV**	**ASV**	Learn Outc	Self-Reg	Discip line	Learn Env
LearnOutc	0.904	0.612	0.343	0.200	0.783			
SelfReg	0.940	0.693	0.343	0.217	0.586	0.833		
Discipline	0.938	0.683	0.250	0.168	0.446	0.500	0.827	
LearnEnv	0.934	0.740	0.059	0.057	0.241	0.242	0.234	0.860

The path coefficient for learning environment in the prediction of learning discipline is significantly, the probability of getting a critical ratio as large as 2.398 in absolute value is 0.016. The other four path coefficients are very significant, namely coefficients for self-regulation in predicting learning discipline and learning outcomes, coefficients for learning environments in predicting selfregulation, and coefficients for learning discipline in predicting learning outcomes.

TABLE V. ESTIMATION AND SIGNIFICANCE OF THE PATH COEFFICIENT

Path			Estimate/ Std	Estimate/ Unstd	C.R.	P
SelfReg	<---	LearnEnv	0.242	0.188	4.424	***
Discipline	<---	SelfReg	0.474	0.57	8.427	***
Discipline	<---	LearnEnv	0.12	0.112	2.398	0.016
LearnOutc	<---	SelfReg	0.468	0.27	7.552	***
LearnOutc	<---	Discipline	0.194	0.093	3.448	***
LearnOutc	<---	LearnEnv	0.083	0.037	1.719	0.086

Their significance are shown in the last column in Table 5 with three asterisks (***), as a sign of the AMOS software output that significance smaller than 0.001, and estimation of the coefficient values both the standardized and unstandardized values are listed in column 2 and column 3. Thus it can be concluded that the learning environment, self-regulation and discipline of learning have a significant direct effect on the mathematics learning outcomes.

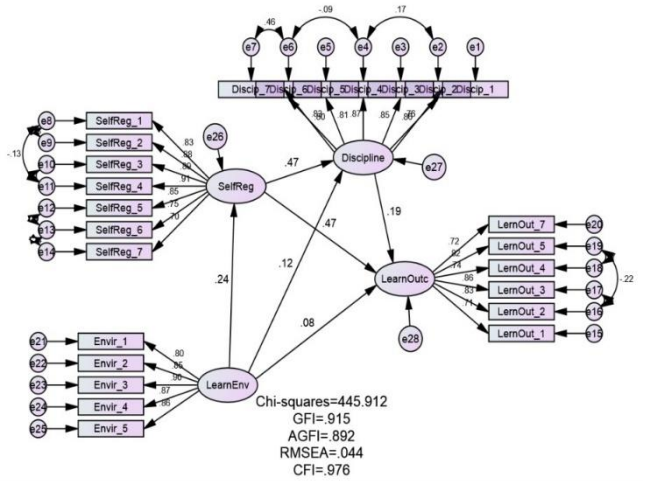

Fig. 3. Coefficients, factor loadings , and goodnessof fit on structural equation modeling

B. Testing The Structural Model

The final model produced in testing the structural model is the full model as shown in Figure 5. Although there is a path coefficient from learning environment to learning outcomes that is not significantly different from zero at the 0.05 level (two-tailed), which only gives probability a critical ratio as large as 1.719 in absolute value is .086 (shown in Table 4), however, experiments carried out in removing the path only have to change the Chi-squres value of 2.972 which is a significance level of 0.085 or a significance of more than 0.05.

C. The Type of Mediation

For the purpose of investigating the types of mediation of discipline variables on the effects of both exogenous variables on learning outcome variables, we have made and analyzed two path analysis models, namely the first path model is the influence of both exogenous variables on learning outcome variables without the presence of discipline variables the second path is the path of influence of both exogenous variables on learning outcomes with the presence of disciplinary variables. Both of these path models are shown in Fig. 4(i) and Figure 4(ii) respectively.

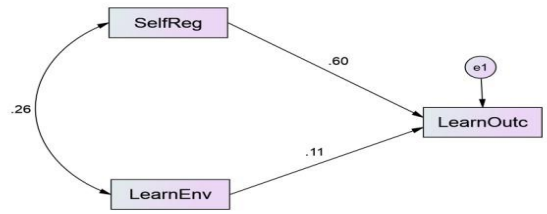

Fig. 4. (i) Estimation of influence coefficients on modeling without mediating variables

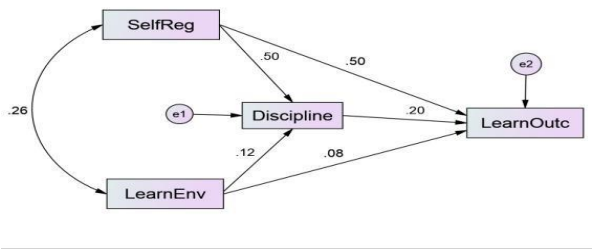

Fig. 4. (ii) Estimation of influence coefficients on modeling with mediating

Estimation and significance results of the indirect effects of both variables, learning environment and self regulation on learning outcomes, using the bootstrap method in AMOS software, are shown in column 4 in Table 6. Both of these variables have significant indirect effects on mathematics learning outcomes, with the magnitude of the effect coefficient are 0.098 and 0.024, respectively.

Based on the following set of statements (shown in the first row in Table 6), the indirect effect of the learning environment on learning outcomes through learning discipline is significant, and the direct effect of learning environment on learning outcomes without the learning discipline presence is significant, then the direct effect of the learning environment on learning outcomes with the presence of learning discipline is apparently still significant and the level of significance decreases, so we conclude that the learning discipline variable is a partial mediation of these indirect effect.

Likewise based on the following statement (shown in the second row in Table 6) that the indirect effect of selfregulation on learning outcomes through learning discipline is significant, and the direct effect of self-regulation on learning outcomes without the presence of learning discipline is significant, then the direct effect of selfregulation on learning outcomes with the presence of learning discipline is apparently still significant and the level of significance decreases, so we conclude that the learning discipline variable is a partial mediation of the indirect influence.

TABLE VI. THE SIGNIFICANCE OF THE DIRECT EFFECT AND INDIRECT EFFECT,AND THE TYPE OF MEDIATION OF THE DISCIPLINARY LEARNING VARIABLE

Hypothesis	Direct Effects		Indirect Effects	Type Mediation
	With Mediation	Without Mediation		
SelfReg -> Dicepl -> LearnOut	0.602 Sig (***)	0.504 Sig (0.001)	0.098 Sig (0.001)	**Partial Mediation**
LearnEnv -> Dicepl -> LearnOut	0.106 Sig (0.01)	0.082 Sig (0.029)	0.024 Sig(0.016)	**Partial Mediation**

In this study, the influence of factors in students on mathematics learning outcomes through the use of Structural Equation Modeling (SEM) concluded that selfregulation variables have a direct effect and indirect effect, which are significant for mathematics learning outcomes, while learning environment variables only have a significant indirect effect on learning outcomes while the direct effect is not significant. Despite investigation by path analysis, which ignores error terms from indicators in measuring latent variables, it is found that the learning environment variables have a significant direct effect.

As we know and we have done that in the use of SEM a series of evaluation processes is applied, namely first is the evaluation of variable measurement models through CFA in the form of testing of convergent validity, discriminant validity, and reliability, and second is evaluation of structural models in the form of testing of structural models, fit models and path coefficients of direct and indirect effect.

Through the whole process, we get the opportunity to investigate deeply and thoroughly, and get conclusive conclusions. SEM is a powerful way which takes into account multiple latent independents each measured by multiple indicators, the modeling of mediators as both causes and effects, measurement error, and correlated error terms [17,18,21]. He further said that SEM more flexible assumptions, particularly allowing interpretasion even in the face of multicollinearity; the desirability of testing models overall rather than coefficient individually [19]

The results showed that the variable self-regulation had a higher influence than the learning environment variable on the mathematics learning outcomes. The path coefficient and significance of influence for the two variables are (0.468; sig (0.001)) and (0.083; sig (0.086)). This is because self-regulation is actually the action of students who have been practiced in daily life or have manifested themselves as behaviors, such as students have arranged their time well, taking time for activities that support their learning, so that they can directly influence learning outcomes [24,25,26] Whereas the learning environment is only the surrounding situation, for example the completeness of learning facilities, the orderly and obedient conditions in the school, the family environment at home that supports learning, and the friendship environment, it can all affect students but not all of these effects are manifested in activities study.

IV. CONCLUSION

The results of the study revealed that the discipline of learning is a partial mediation on the influence of both learning environment variables and self-regulation on students' mathematics learning outcomes. This is due to various self-regulation behaviors and examples of the

student learning environment mentioned above, the opportunity to be realized into behaviors in learning activities is closely determined by disciplined attitudes in managing time, working on assignments from the teacher, and preparing the completeness of learning.

ACKNOWLEDGMENT

Thank to Dean and Deputy Dean of the Faculty of Theacher Training and Education, Mulawarman University; Muhammad Amir M., Lambang Subagyo, and P.M. Labulan for funding this research. Thank to all the Esic committees, Zulkarnain et al. for holding the conference so that this paper has the opportunity to be published.

REFERENCES

[1] A. Basir, A. M. Lahjie, B. D. A. . Simarangkir, and P. Matius, "Presenting the Cultural Significance Index of Plants in the Muara Lawa, Kutai Barat District "*Journal of Biology, Agriculture and Healthcare*, vol. 5, no. 10. International Institute for Science, Technology and Education (IISTE), 2015.

[2] A.Basir A, Sugeng, U. Haryaka, " Statistika Dasar (Teaching materials for the Mathematics Education Study Program at the Faculty of Theacher Training and Education, Mulawarman University) " unpublished, 2017.

[3] S. R. Sletten, "Investigating Flipped Learning: Student Self-Regulated Learning, Perceptions, and Achievement in an Introductory Biology Course," *J. Sci. Educ. Technol.*, 2017.

[4] E. Bozpolat, "Investigation of the self-regulated learning strategies of students from the faculty of education using ordinal logistic regression analysis," *Kuram ve Uygulamada Egit. Bilim.*, 2016.

[5] S. Samrin, "Pengaruh Disiplin Belajar, Lingkungan Belajar dan Variasi Mengajar Guru terhadap Prestasi Belajar Siswa Madrasah Aliyah di Kota Kendari," 2016.

[6] H. K. Ning and K. Downing, "A latent profile analysis of university students' self-regulated learning strategies," *Stud. High. Educ.*, 2015.

[7] M. Komarraju and D. Nadler, "Self-efficacy and academic achievement: Why do implicit beliefs, goals, and effort regulation matter?," *Learn. Individ. Differ.*, 2013.

[8] H. P. Phan, "Multiple regression analysis of epistemological beliefs, learning approaches, and self-regulated learning," *Electron. J. Res. Educ. Psychol.*, 2008.

[9] J.O. Rawlings, Applied Regression Analysis, California, Wadsworth and Brooks, 1988, pp.244,292.

[10] H. M. Myers, *Classical and Modern Regression With Applications*, 2 edition, Boston, Pws-Kent Publishing Company, 1990. Pp 123-132. [11] Z. Sun, K. Xie, and L. H. Anderman, "The role of self-regulated learning in students' success in flipped undergraduate math courses," *Internet High. Educ.*, 2018.

[11] H. K. Keskin," A Path Analysis of Metacognitive Strategies in Reading, Self-Efficacy and Task Value," International J. Soc. Sci. & Education, 2014.

[12] S. Masrura, "Faktor-Faktor Psikologis yang Mempengaruhi Kesadaran Metakognisi dan Kaitannya dengan Prestasi Belajar

[13] Matematika," Jurnal Matematika dan Pembelajaran (Mapan), Vol. 1 No. 1: 1-18, 2013,

[14] I. S. Al-Harthy, C. A. Was, and R. M. Isaacson, "Goals , Efficacy and Metacognitive Self-Regulation: A Path Analysis," Int. J. Educ., 2010.

[15] H. K. Azar, M. G. Lavasani, E. Malahmadi, and J. Amani, "The role of self-efficacy, task value, and achievement goals in predicting learning approaches and mathematics achievement," in Procedia - Social and Behavioral Sciences, 2010.

[16] S. D. Brown, S. Tramayne, D. Hoxha, K. Telander, X. Fan, and R. W. Lent, "Social cognitive predictors of college students' academic performance and persistence: A meta-analytic path analysis," J. Vocat. Behav., 2008.

[17] M. S. Khine, A. Dhabi, and U. A. Emirates, "Application of Structural Equation Modeling in Educational Research and Practice," no. June, 2013.

[18] N. Urbach and A. Frederik, "Structural Equation Modeling in Information Systems Research Using Partial Least Squares," J. Inf. Technol. Theory Appl., 2010.

[19] G. D. Garson, Structural Equation Modeling, 2012 Edition, Statistical Publishing Associates, 2012, pp.13.

[20] M. Sadi, Ozlem and Uyar, "Learning Strategies and Achievement: a Path Education," J. Balt. Sci. Educ., 2013.

[21] T. Jolliffe, Principal Component Analysis. Book. 1986. Retrieved from http://www.google.com/search?client=safari&rls=enus&q=Principal+Component+Analysis&ie=UTF8&oe=UTF-8

[22] R. A. Johnson, , and D.W. Wichern, Applied Multivariate Statistical Analysis. Second Edition. Prentice Hall, Englewood Cliffs, New Jersey. 1988.

[23] G. Ocak and A. Yamaç, "Examination of the relationships between fifth graders' self-regulated learning strategies, motivational beliefs, attitudes, and achievement," Kuram ve Uygulamada Eğitim Bilim., 2013.

[24] B. Furnes and E. Norman, "Metacognition and Reading: Comparing Three Forms of Metacognition in Normally Developing Readers and Readers with Dyslexia," Dyslexia, 2015.

[25] J. W. Lin, H. H. Huang, and Y. S. Chuang, "The impacts of network centrality and self-regulation on an e-learning environment with the support of social network awareness," Br. J. Educ. Technol., 2015.

[26] T. J. Cleary and P. P. Chen, "Self-regulation, motivation, and math achievement in middle school: Variations across grade level and math context," J. Sch. Psychol., 2009.