Construction of Emergency Material Mobilization Model in Normal State

Qingwei Zhang
State Grid HENAN Management Training Center
Zhengzhou, China
zqw20017304@163.com

Ziyao Li
Economic and Management school
Zhongyuan University of Technology
Zhengzhou,China
lilizqw@163.com

***Abstract*—As for emergency material supply in crisis, it is critical for emergency material mobilization to prepare in normal state. Economic mobilization has certain relations with supply chain in normal state. On the basis of analyzing the relationship of mobilization and supply chain, the paper constructs emergency material mobilization petri model in normal state, finally analyzes operation efficiency and time performance.**

Keywords- emergencymaterial; mobilization; petri net

I. INTRODUCTION

National economic mobilization theory has innovated and evolved for many years. With the increasing perfect practical work of economic mobilization, relatively complete national economic mobilization theory system has formed.

In the year of 2002, professor Kong Zhaojun[1] put forwarded the idea of macro mobilization, regarding that mobilization not only serve for the war, but serve for national safe in the broadly sense. Jin xiaofeng etc. [2] come up with the gradual response mobilization pattern——along with the increasing upgrade of war threat, nation launch relatively gradual response mobilization. Kong Zhaojun[3]applied the thought of agile manufacturing into national economic mobilization theory, then proposing the concept[of agile mobilization, and analyzing related problems among the agile manufacturing and agile mobilization and some theory problems. In the background of Civil-military integration development, it is the must for us to analyze and optimize operational action referring to process management in order to specify the job of varying-level national economic mobilization agency. So Kong Zhaojun[4] analyzed the importance of national economic mobilization flow on its job, discussed the difficult point of boosting standard flow and proposed the idea about how to develop national economic

mobilization operation flow, giving the direction to further study national economic mobilization flow.

II. THE RELATIONSHIP OF MATERIAL MOBILIZATION AND SUPPLY CHAIN IN NORMAL STATE

The research of Material mobilization can be divided into two aspect, the one is mobilization process, namely that side chain identifying mobilization object according to mobilization tasks; the other one is supply chain, namely that supply main chain delivering material resource. The paper focuses on the former.

In normal state, the chief task of material mobilization prepare is to anticipate need and do potential investigation by statistics department. Then economic agency specifies a plan in terms of data given by statistics department and the plan exercise. The prepare of economic mobilization agency, including potential data investigation, plan compiling and plan exercise etc., guarantees the material-needed in emergency state.

In addition, relying on present civilian enterprise, the operation of supply chain adopts market operation model. Candidate enterprise prepares emergency material in normal state. Its normal construction must concern mobilization factor, in spite of market rules.

III. CONSTRUCTION OF EMERGENCY MATERIAL MOBILIZATION PETRI NET MODEL

A. petri net model of identifying economic mobilization enterprise

According to mobilization task and mobilization emphasis, economic mobilization agency inquired and bid, then specifying candidate enterprise.

In the process of choosing candidate enterprise, economic mobilization agency should find out the proper enterprise which has relatively fine operation capability and supply capability, with the aid of potential data and on the basis of allocated mobilization task. Such enterprise should operates while obeying to market rules and focusing on mobilization prepare, so that it can guarantee the update and eliminated of emergency material in time. What's more, in choosing candidate enterprise, it is important to concern whether capability is matched with task and the characteristics of materials-needed. Emphasis is varying with location.

Figure 1 consists of 9 places and 8 transitions, implication of which are following as TABLE Ⅰ.

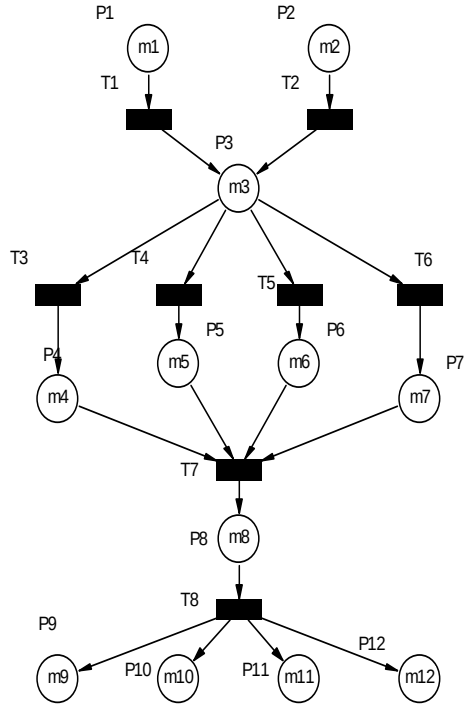

FIGURE I process of candidate enterprise specification

TABLE I implication of petri net of candidate enterprise

place	implication	place	implication
P1	mobilization district 1	P7	logistics enterprise
P2	mobilization district 2	P8	economic mobilization agency
P3	economic mobilization agency	P9	candidate warehousin g enterprise
P4	warehousing enterprise	P10	candidate manufacture enterprise
P5	manufacture enterprise	P11	candidate distribution enterprise
P6	distribution enterprise	P12	candidate logistics enterprise
transition	implication	transition	implication
T1	judging from geographic location	T5	construction of distribution
T2	judging from economy	T6	construction of logistics
T3	construction of warehousing	T7	inquire bid
T4	construction of manufacture	T8	sign contract

B. petri net model of economic mobilization prepare

Firstly, in terms of material need prediction, scope, variety, and amount are determined; secondly, plan is worked out on the basis of information and data provided by statistics department. Potential investigation scope is determined on the basis of plan. Then needed resource is determined feedback economic agency; finally, sectors or businesses on different level exercise plan and feedback the result to economic mobilization agency. Figure 2 represents the implication of prepare, with 9 places and 9 transitions, which implication is shown in TABLE Ⅱ.

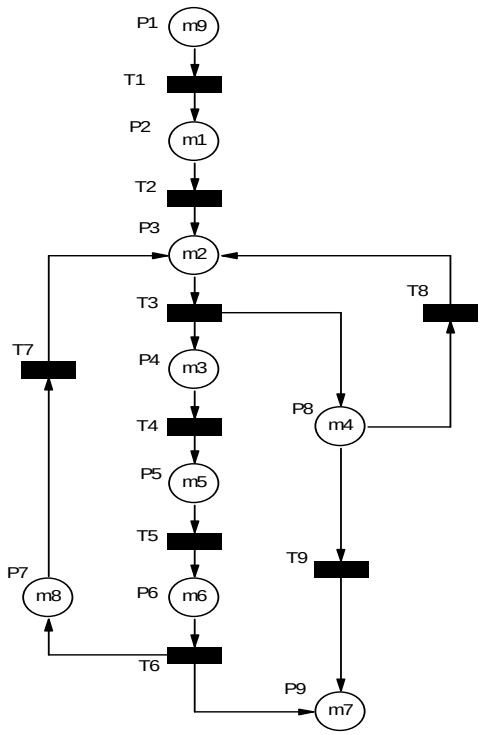

FIGURE II process of economic mobilization prepare

TABLE II implication of petri net of mobilization prepare

place	implication	place	implication
P1	statistics department 1	P6	statistics department
P2	statistics department 2	P7	candidate enterprise
P3	economic mobilization department	P8	relative department and enterprise
P4	statistics department	P9	statistics department
P5	statistics department		

transition	implication	transition	implication
T1	predict need	T6	determine resource allocation
T2	determine scope\variety\amount	T7	information feedback
T3	make plan	T8	modify plan in terms of result of plan
T4	how to investigate potentials	T9	plan exercise successfully
T5	potentials investigation		

$$A=\begin{bmatrix} -1 & 1 & 0 & 0 & 0 & 0 & 0 & 0 & 0 \\ 0 & -1 & 1 & 0 & 0 & 0 & 0 & 0 & 0 \\ 0 & 0 & -1 & 1 & 0 & 0 & 0 & 1 & 0 \\ 0 & 0 & 0 & -1 & 1 & 0 & 0 & 0 & 0 \\ 0 & 0 & 0 & 0 & -1 & 1 & 0 & 0 & 0 \\ 0 & 0 & 0 & 0 & 0 & -1 & 1 & 0 & 1 \\ 0 & 0 & 1 & 0 & 0 & 0 & -1 & 0 & 0 \\ 0 & 0 & 1 & 0 & 0 & 0 & 0 & -1 & 0 \\ 0 & 0 & 0 & 0 & 0 & 0 & 0 & -1 & 1 \end{bmatrix}$$

Supposing $\lambda=\{1, 1, 3, 1, 2, 1, 1, 1, 1\}$ is referring to a time random parameters with exponential distribution.

TABLE III reachable marking of mobilization prepare model

	P_1	P_2	P_3	P_4	P_5	P_6	P_7	P_8	P_9
M_1	1	0	0	0	0	0	0	0	0
M_2	0	1	0	0	0	0	0	0	0
M_3	0	0	1	0	0	0	0	0	0
M_4	0	0	0	0	1	0	0	1	0
M_5	0	0	0	0	0	1	0	1	0
M_6	0	0	0	0	0	0	1	1	0
M_7	0	0	1	1	0	0	0	0	0
M_8	0	0	1	0	0	0	0	1	1
M_9	0	0	1	0	0	0	0	0	1

On the platform of Matlab, we solve liner equation and get the value of probability of stability P(Mi)as follows

P(M1)=0.212
P(M2)=0.212
P(M3)=0.071
P(M4)=0.071
P(M5)=0.035
P(M6)=0.071
P(M7)=0.071
P(M8)=0.047
P(M9)=0.212

IV. PERFORMANCE ANALYSIS

We only analyze performance on economic mobilization prepare.

A. *time performance*

Average performance time refers to average time in terms of mobilization need. Defining a subsystem of material mobilization net as follows:

PN'=(P',T',F',M0, λ'), P'=P-{P1},

F' is arc set deleting arc links to {P1}, T' and λ' is the same as original net. Average performance time is the same as that of original net. The probability with one token in P places except P1 .The average token in subsystem PN' is calculated as follows

P(M(P2=1))=0.212

P(M(P3=1))= 0.401

P(M(P4=1))=0.071

P(M(P5=1))=0.035

P(M(P7=1))=0.071P(M(P8=1))=0.224P(M(P9=1))=0.259

N=P(M(P2=1))+P(M(P3=1))+P(M(P4=1))+P(M(P5=1))+P(M(P6=1))+P(M(P7=1))+ P(M(P8=1))+ P(M(P9=1))=1.344

Tokens that entering subsystem PN' in unit interval:

λ= P(M(P1=1))=0.212

Average performance time T=N/λ=6.34(day)

B. *operation efficiency*

operation efficiency reflects utilization efficiency of resource, facility, and human etc. in different links of material mobilization and the degree how different nodes link to each other. It is a critical index about operation efficiency. we can calculate operation efficiency of different links as follows

P(M(P2=1))=0.212

P(M(P3=1))= 0.401

P(M(P4=1))=0.071

P(M(P5=1))=0.071

P(M(P6=1))=0.035

P(M(P7=1))=0.071

P(M(P8=1))= 0.224

$$P(M(P9=1))= 0.259$$

The result reflects the weight of time of varying links on total time. We can see that:(1)operation efficiency of different links is not balanced so that it is must for resource to properly allocated; (2)there is seldom idle state in links, explaining the whole operation efficiency is high.

REFERENCES

[1] Kong Zhaojun. On nurturing and educating of the macro mobilization idea[J]. Military Economic Research, 2002(10)

[2] Jin xiaofeng, Fu zhigang. Gradual response mobilization[N].China GUOFANG newspaper, 2006, 8（13）

[3] Kong Zhaojun. Agile mobilization[J]. Journal of Beijing institute of technology (social science edition), 2005,7（1）

[4] Kong Zhaojun. On the National Economy Mobilization Process Management[J]. Journal of Beijing institute of technology (social science edition), 2010, 12